SIBA

FUSES

Safety through quality

HIGH VOLTAGE FUSES

Over many decades SIBA has developed a global product line of High Voltage Fuses that are comprehensive for any and all applications.
Superior engineering, advanced technology and innovation give us the confidence to say “safety through quality”. Not just our motto but our passion. Our dedication to our clients is not solely represented in the quality of the design of our fuses or our world renown reliability:

- Our technical support staff is ready and able to answer all your questions
- Custom designs are not an inconvenience, but a welcome challenge
- Worldwide distributing network to serve all your fuse needs

This section of **HIGH VOLTAGE FUSES** comprises the following :

HH

DIN Standard — HHD

British Standard — HHB

French Standard — HHF

Medium Voltage Fuses for capacitors — HHC

Oil submersible Fuses — HHO

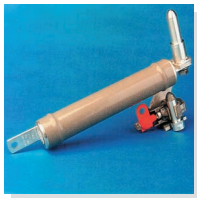

Plug-in Fuses for Overhead Line Transformers — HHP

Fuses for Motor Circuit Protection — HHM

Introduction

Applications

High Voltage fuse-links (HV fuse-links) are in use as protection devices in medium voltage switchgear. The big advantage is the very fast current limiting operation in case of short-circuit failures. Consequently they protect switchgear and equipment against dynamic thermal effects of such short-circuits in a very effective way.

SIBA-HV fuse-links can be used for the protection of:
- distribution transformers
- motors
- capacitor banks
- voltage transformers
- cable feeders

SIBA-HV fuse-links are suitable for the installation in
- indoor switchgears, air- and gas-insulated
- outdoor switchgear
- overhead lines
- service under severe climatic conditions
- installation in oil-insulated switchgear
- installation inside distribution transformers under oil

Features of the SIBA HV fuse-links:
- Reliable sealing system against humidity / dust and corrosion
- Free of ageing
- Low power losses and respectively, low temperature rise
- High breaking capacity
- High current limitation
- Low switching voltage
- High service reliability because of advanced controlled fabrication process
- Many decades of positive field experience

Standards

SIBA-HV fuse-links comply with the following standards and specifications:

IEC 60282-1 / VDE 0670 Part 4:
High-voltage fuses Part 1: Current limiting fuses

IEC 60 787 / VDE 0670 Part 402
Selection of current limiting fuses for transformer circuits

DIN 43625
High-voltage fuses, rated voltages 3.6 up to 36 kV

IEC 60644 / VDE 0670 Part 401
Requirements for HV fuse-links for motor circuit applications

IEC 60549
High voltage fuses for external protection of power capacitors

IEC 60420 / VDE 0670 Part 303
High-voltage alternating current switch-fuse combinations

Introduction

Definitions

Rated current
The rated current which a fuse-link can carry continously without altering the time/current-characteristic curve. At higher ambient temperatures as well as at higher power losses generated by fuses of non-standardized very high rated currents, it is neccessary to use derating factors. In general, this will be the case at rated currents above 160 A for protection of motor circuits.

Service voltage
This is the actual applied voltage in the circuit; voltage on the contacts of the fuse after interruption.

Time/current-characteristics
The time/current-characteristics (time/current-curve) show the relationship of the virtual melting time to the prospective short-circuit current and are given as a medium value.
The tolerance of the time/current-characteristics is ± 10% in direction of current.

Switching voltage
The high number of tests according international standards show that the maximum possible switching voltages are well below the permissible value which is 3.2 times the service voltage. That means for example, fuse-links rated 10/24 kV can also be used in 10 kV networks.

Back-up fuses
Back-up fuses are able to break all currents from rated breaking current down to the minimum breaking current (I_3). Usually fault currents between the minimum breaking current and the rated current (I_N) cannot be safely interrupted.

General-purpose fuses
Because of their special design, SIBA General-purpose fuses, called “VS-Schutz”, are able to interrupt any current from rated breaking current down to a current which causes melting of the fuse elements in less than 1 hour.

Application Guide

Changing of HV-Fuse links in 3-phase systems
If one HV-fuse-link in a 3-phase system has operated, IEC 282-1 / VDE 0670, Part 4 Section 23.2 recommends that all 3 fuse-links have to be changed.

In case of 2-pole or 3-pole short-circuits due to the manufacturing tolerances of the fuse elements, it is possible that only 1 or 2 fuse-links operate before all the fuse elements of the remaining fuse-links have melted. If such fuse-links were left in service, it is likely that nuisance operation may occur later.

HV fuse-links for transformer protection
To protect transformers in distribution networks back-up fuse-links are mainly used. To ensure a suitable protection, the values of selection table according to VDE 0670 Part 402, Table 2 may be applied. The extended tables on this basis are shown in the technical annex. This tables give recommendations for transformer ratings of 50-2000 kVA and are seperated into 2 diffferent applications which consider the concept of protection on the secondary side of the transformer:
- protection with low-voltage fuse-links of class gG
- isolating links only without any protection device

HV fuse-links for the protection of motor circuits
High-voltage fuse-links for motor circuits are back-up fuses which are designed to cover the special needs for motor protection.

The duty of such fuses is to protect the motor switches against inadmissible high overcurrents which may cause contact welding. Moreover, in case of short-circuits they have to provide interruption within milliseconds to protect the circuit against the dynamic effects of such currents.

Introduction

For selection of proper motor protection not only the fuse-link rated current has to be considered. Criteria like motor start-up current, number of starts per hour as well as duration of starts have to be taken into consideration. It is recommended also to protect motors with a reduced start-up current by fuse-links. Here the rated current of the fuses should be taken as twice the full load current of the motor.

Under consideration of motor starting current, starting time and starting frequency the rated currents of HV-fuse-links can be taken from diagrams in the technical annex.

HV fuse-links for voltage transformer protection

Although HV fuse-links are not able to protect voltage transformers efficiently in case of internal fault, they should be installed according to the requirements of VDE 0101. In case of fault the voltage transformer shall be disconnected from the supply as fast as possible in order to limit the fault effects. This is why HV fuse-links of lowest possible rated currents – as a rule 6.3 A – are recommended.

HV fuse-links for capacitor protection

Whenever capacitors are connected to a network or to a capacitor bank, high short-circuit peak currents flow, the size and the duration depend on
- capacitor size
- frequency and inductance of network
- closing angle of operation

In order to withstand the higher harmonics and to reduce temperature rise, the rated current of the fuse-links should be at last 2 times the capacitor bank rated current.

Increasing transient voltages can never be excluded. HV fuse-links of the next higher voltage range should be used for safety reasons.

The selection table classify HV fuse-links to the corresponding high voltage capacitors is shown in the technical annex.

Discriminations requirements

Discrimination between HV fuse-links

Discrimination problems may occur when distant branch stations in supply nets are protected by HV fuse links in line. In this case the rated current of the upstream HV fuse-links should be increased by a factor 2.

Discriminations between HV and LV fuse-links

To prevent the possibility of HV fuse interruption due to a low voltage side fault, a sufficient discrimination must be secured. For comparison the time/current-curves of both fuse-links have to be converted either to the low-voltage or the high-voltage level. This is especially important if several LV fuse-links in parallel are operated in the low voltage output. The fuse-link with the highest rated current is decisive for discrimination.

Discrimination between HV fuse-links and LV circuit-breaker

This operation mode requires comparison of time/current-characteristics of the HV-fuse links with the interrupting characteristics of the designated circuit breaker. For this purpose the time/current characteristics of the HV-fuse links are converted into the low voltage level and then compared with the characteristics of the breaker relay characteristics. Sufficient discrimination is given for this operation mode when the fuses clear the fault before the circuit breaking capacity is reached.

HIGH VOLTAGE FUSES

GERMAN DIN STANDARD

FOR AIR & GAS INSULATED SWITCHGEARS OUTDOOR SWITCHGEARS

Design and construction

SIBA HV Fuse-links have parallel connected pure silver fuse-elements. The design and method of production of the elements ensures narrow tolerances of time-current-characteristics.

The fuse elements are wound on a ceramic support and are attached to the silver plated connection caps by means of spot-welding. The connection caps are fitted inside the silver plated copper end caps by spot welding. The copper end caps themselves are press-fitted onto the porcelain tube which is glazed inside and outside. The end caps are furthermore mechanically fixed to the porcelain tube and additionally sealed by a durable elastic sealing medium. This sealing method has been proven over many decades of positive field experience and ensures tightness against ingress of humidity.

Striker pin

SIBA HV Fuse-links are available with striker pins of the force:

- 80 N (Part No. 30 … 13 for basic-type) and
- 120 N (Part No. 30 … 14 for variant-type)

The characteristics of both striker pins corresponds to IEC 60282-1, VDE 0670 Part 4 and are of the energy-category “medium”.

The striker pin system is connected by means of a high resistance parallel conductor. After melting the main fuse elements the striker pin will indicate the operation status of the fuse and open a load break switch or actuate a microswitch for remote indication.

The temperature limiting function of the fuse striker pin

SIBA HV Fuse-links up to and including 160 A with a striker pin of 80 N are equipped with an integrated temperature limiter as standard. The temperature limiter is fitted inside the striker pin system. The SIBA striker pin system therefore has the following functions:

- thermal protection of adjacent equipment, especially SF6 Insulated switchgear
- limitation of failure current at the overload region
- improved properties for the switch-fuse combinations according IEC 60420

The integrated temperature limiter avoids inadmissible high temperatures – no matter for whatever reason they are generated – in gas-insulated switchgear or narrow switchgear enclosures. By means of a melting activator temperatures inside the fuse link enclosure are limited to below approx. 100°C. This design especially considers continuity of current supply for the end user for as long as possible. The system reacts in such a way that short time overloads do not cause the fuse to interrupt the circuit unnecessarily. Only when inadmissible values are exceedes the fuse will open the switch via the striker pin.

Higher temperatures on plastic fuse enclosures in SF6-insulated switchgear can be caused by:

- selection of a fuse rating too low for transformer protection
- fuses are loaded with fault currents below the minimum operating current
- deterioration of fuse links caused by transient fault currents (e.g. lightning strike)
- transformer faults currents (e.g. winding short-current)
- overloading of the fuse when loaded with currents as described in IEC 420 Test Duty 3
- additional temperatures rise because of poor clip fitting

Fuse-links with integrated temperature limiter are compatible with standard Fuse links. All coordination schedules can be used.

Further information on our temperature limiter, design, construction, can be obtained from our website.

SIBA FUSES

HIGH VOLTAGE FUSES

GERMAN DIN STANDARD

FOR AIR & GAS INSULATED SWITCHGEARS
OUTDOOR SWITCHGEARS

Selection Guide

Rated Voltage AC kV	DIN Size E mm	Class	Part No.	Selection Guide Page	Techn. Data Page
3/7.2	192	Back up	30 002 13	HHD 5	HHD 23
3/7.2	192	Back up	30 010 13	HHD 5	HHD 23
3/7.2	192	Back up	30 018 13	HHD 5	HHD 23
3/7.2	192	Back up	30 018 14	HHD 5	HHD 23
3/7.2	292	Back up	30 098 13	HHD 6	HHD 23
3/7.2	292	Back up	30 099 13	HHD 6	HHD 23
3/7.2	292	Back up	30 100 13	HHD 6	HHD 23
3/7.2	292	Back up	30 100 14	HHD 6	HHD 23
3/7.2	442	Back up	30 109 13	HHD 7	HHD 24
3/7.2	442	Back up	30 110 13	HHD 7	HHD 24
3/7.2	442	Back up	30 110 14	HHD 7	HHD 24
6/12	192	Back up	30 119 13	HHD 8	HHD 25
6/12	192	Back up	30 267 13	HHD 8	HHD 25
6/12	292	Back up	30 004 13	HHD 9	HHD 25
6/12	292	Back up	30 012 13	HHD 9	HHD 25
6/12	292	Back up	30 020 13	HHD 9	HHD 25
6/12	292	Back up	30 020 14	HHD 9	HHD 25
6/12	442	Back up	30 101 13	HHD 10	HHD 26
6/12	442	Back up	30 102 13	HHD 10	HHD 26
6/12	442	Back up	30 103 13	HHD 10	HHD 26
6/12	442	Back up	30 103 14	HHD 10	HHD 26
6/12	537	Back up	30 211 13	HHD 11	HHD 26
6/12	537	Back up	30 211 14	HHD 11	HHD 26
10/17.5	292	Back up	30 255 13	HHD 12	HHD 27
10/17.5	292	Back up	30 221 13	HHD 12	HHD 27
10/17.5	292	Back up	30 222 13	HHD 12	HHD 27
10/17.5	367	Back up	30 176 13	HHD 13	HHD 27
10/17.5	367	Back up	30 177 13	HHD 13	HHD 27
10/17.5	367	Back up	30 178 13	HHD 13	HHD 27
10/17.5	367	Back up	30 178 14	HHD 13	HHD 27
10/17.5	442	Back up	30 231 13	HHD 14	HHD 28
10/17.5	442	Back up	30 232 13	HHD 14	HHD 28
10/17.5	442	Back up	30 233 13	HHD 14	HHD 28

HIGH VOLTAGE FUSES
GERMAN DIN STANDARD

FOR AIR & GAS INSULATED SWITCHGEARS
OUTDOOR SWITCHGEARS

Selection Guide

Rated Voltage AC kV	DIN Size E mm	Class	Part No.	Selection Guide Page	Techn. Data Page
10/24	292	Back up	30 180 13	HHD 15	HHD 29
10/24	292	Back up	30 225 13	HHD 15	HHD 29
10/24	442	Back up	30 006 13	HHD 16	HHD 29
10/24	442	Back up	30 014 13	HHD 16	HHD 29
10/24	442	Back up	30 022 13	HHD 16	HHD 29
10/24	537	Back up	30 203 13	HHD 17	HHD 30
10/24	537	Back up	30 204 13	HHD 17	HHD 30
10/24	537	Back up	30 196 13	HHD 17	HHD 30
10/24	537	Back up	30 196 14	HHD 17	HHD 30
20/36	442	Back up	30 181 13	HHD 18	HHD 31
20/36	537	Back up	30 008 13	HHD 19	HHD 31
20/36	537	Back up	30 016 13	HHD 19	HHD 31
20/36	537	Back up	30 024 13	HHD 19	HHD 31
6/12	292	General purpose	30 004 93	HHD 21	HHD 32
6/12	292	General purpose	30 012 93	HHD 21	HHD 32
6/12	292	General purpose	30 020 93	HHD 21	HHD 32
10/24	442	General purpose	30 006 93	HHD 22	HHD 32
10/24	442	General purpose	30 014 93	HHD 22	HHD 32
10/24	442	General purpose	30 022 93	HHD 22	HHD 32

Selection Guide — Fuse-bases

Article	Rated Voltage AC kV	DIN-Size E mm	Part No.	Techn. Data Page
Indoor Fuse-bases	7.2	192	31 001 02	HHD 40
	12	292	31 003 02	HHD 40
	24	442	31 005 02	HHD 40
	36	537	31 007 02	HHD 40
	24	292	31 221 01	HHD 40
Outdoor Fuse-bases	7.2	192	31 002 01	HHD 41
	12	292	31 004 01	HHD 41
	24	292	31 006 01	HHD 41
	36	537	31 008 01	HHD 41

SIBA FUSES

HIGH VOLTAGE FUSES
GERMAN DIN STANDARD

FOR AIR & GAS INSULATED SWITCHGEARS
OUTDOOR SWITCHGEARS

Selection Guide — Microswitch fitting consists of

Article	Length mm	Part No.	Techn. Data Page
Microswitch	660	31 001 10	HHD 42
	900	31 001 14	HHD 42
Fuse Clip		34 002 01	HHD 43
Distance Plate		31 002 01.3	HHD 43

Selection Guide — Accessories

Article	Rated Voltage kV	Part No.	Techn. Data Page
Extension Adapter	12/24	34 006 01	HHD 44
Test Fuse-link for gas insulated switchgear	24	33 010 03	HHD 45
Contact Clip 200 A indoor and outdoor		31 003 02.20	HHD 46
Contact Clip heavy duty		34 001 01.20	HHD 46
Storage Holder	12	33 004 01	HHD 47
	24	33 006 01	HHD 47
	36	33 008 01	HHD 47

HIGH VOLTAGE FUSES

GERMAN DIN STANDARD

FOR AIR & GAS INSULATED SWITCHGEARS
OUTDOOR SWITCHGEARS

DIN Size	Rated voltage	Class	Standard
E=192 mm	**AC 3/7.2 kV**	**Back up**	**DIN 43625 · IEC 60282-1**

Rated current	Part No.	D= Diameter inch	D= Diameter mm	Rated breaking current kA	Weight (kg/1)	Pack
6.3 A	30 002 13	2.10	53	63	1.2	1
10 A	30 002 13	2.10	53	63	1.2	1
16 A	30 002 13	2.10	53	63	1.2	1
20 A	30 002 13	2.10	53	63	1.2	1
25 A	30 002 13	2.10	53	63	1.2	1
31.5 A	30 002 13	2.10	53	63	1.2	1
40 A	30 002 13	2.10	53	63	1.2	1
50 A	30 002 13	2.10	53	63	1.2	1
63 A	30 010 13	2.64	67	63	1.5	1
80 A	30 010 13	2.64	67	63	1.5	1
100 A	30 010 13	2.64	67	63	1.5	1
125 A	30 010 13	2.64	67	63	1.5	1
160 A	30 018 13	3.35	85	63	2.9	1
200 A	30 018 14	3.35	85	50	2.9	1
250 A	30 018 14	3.35	85	50	2.9	1

Prefered Standard size 3/7.2 kV

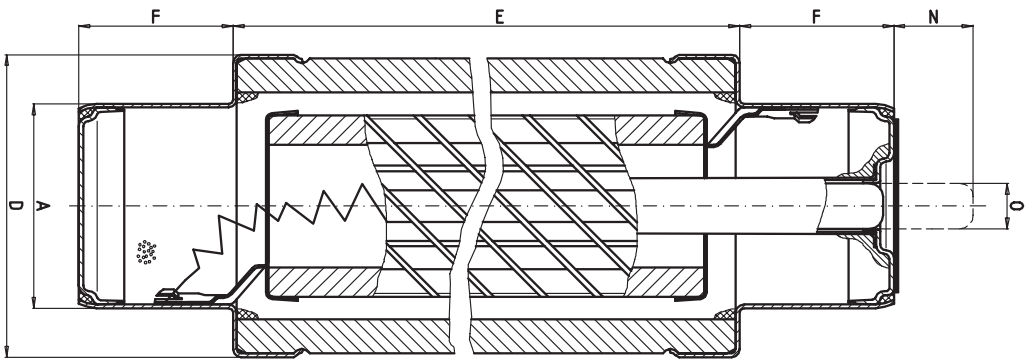

A	1.77 ”	(45 mm)
F	1.30 ”	(33 mm)
O	0.40 ”	(10 mm)
N	1.38 ”	(35 mm)

HHD

SIBA FUSES

HIGH VOLTAGE FUSES
GERMAN DIN STANDARD

FOR AIR & GAS INSULATED SWITCHGEARS
OUTDOOR SWITCHGEARS

DIN Size	Rated voltage	Class	Standard
E= 292 mm	**AC 3/7.2 kV**	**Back up**	**DIN 43625 · IEC 60282-1**

Rated current	Part No.	D= Diameter inch	D= Diameter mm	Rated breaking current kA	Weight (kg/1)	Pack
6.3 A	30 098 13	2.10	53	63	1.6	1
10 A	30 098 13	2.10	53	63	1.6	1
16 A	30 098 13	2.10	53	63	1.6	1
20 A	30 098 13	2.10	53	63	1.6	1
25 A	30 098 13	2.10	53	63	1.6	1
31.5 A	30 098 13	2.10	53	63	1.6	1
40 A	30 098 13	2.10	53	63	1.6	1
50 A	30 098 13	2.10	53	63	1.6	1
63 A	30 099 13	2.64	67	63	2.0	1
80 A	30 099 13	2.64	67	63	2.0	1
100 A	30 099 13	2.64	67	63	2.0	1
125 A	30 099 13	2.64	67	63	2.0	1
160 A	30 100 13	3.35	85	50	3.8	1
200 A	30 100 14	3.35	85	50	3.8	1
250 A	30 100 14	3.35	85	50	3.8	1
315 A	30 100 14	3.35	85	50	3.8	1
355 A	30 100 14	3.35	85	50	3.8	1

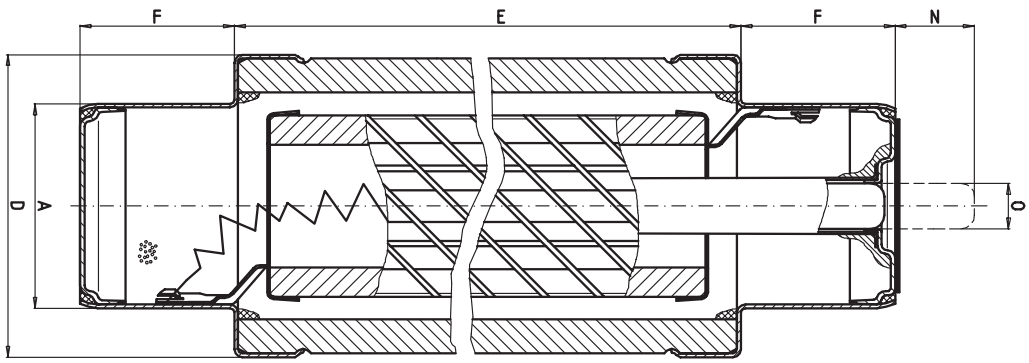

A	**1.77 ”**	(45 mm)
F	**1.30 ”**	(33 mm)
O	**0.40 ”**	(10 mm)
N	**1.38 ”**	(35 mm)

HIGH VOLTAGE FUSES

GERMAN DIN STANDARD

FOR AIR & GAS INSULATED SWITCHGEARS
OUTDOOR SWITCHGEARS

DIN Size	Rated voltage	Class	Standard
E= 442 mm	**AC 3/7.2 kV**	**Back up**	**DIN 43625 · IEC 60282-1**

Rated current	Part No.	D= Diameter inch	D= Diameter mm	Rated breaking current kA	Weight (kg/1)	Pack
100 A	30 109 13	2.64	67	63	2.9	1
125 A	30 109 13	2.64	67	63	2.9	1
160 A	30 110 13	3.35	85	63	5.4	1
200 A	30 110 14	3.35	85	50	5.4	1
250 A	30 110 14	3.35	85	50	5.4	1
315 A	30 110 14	3.35	85	50	5.4	1
355 A	30 110 14	3.35	85	50	5.4	1
400 A	30 110 14	3.35	85	50	5.4	1
500 A	30 110 14	3.35	85	50	5.4	1

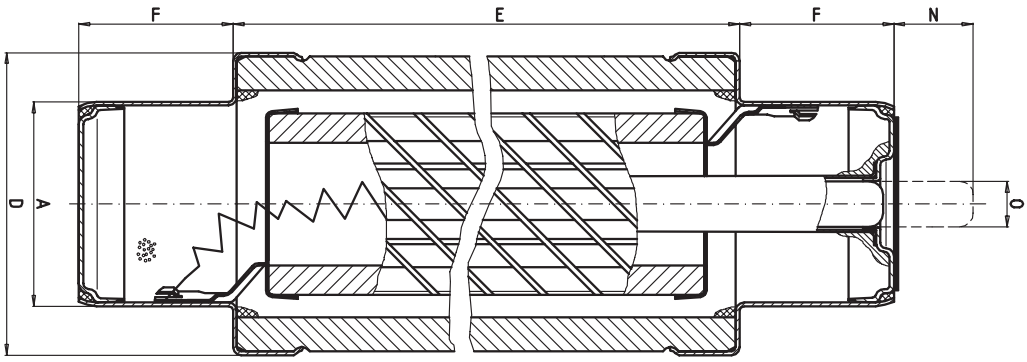

A	1.77 ”	(45 mm)
F	1.30 ”	(33 mm)
O	0.40 ”	(10 mm)
N	1.38 ”	(35 mm)

SIBA FUSES

HIGH VOLTAGE FUSES

GERMAN DIN STANDARD

FOR AIR & GAS INSULATED SWITCHGEARS
OUTDOOR SWITCHGEARS

DIN Size	Rated voltage	Class	Standard
E= 192 mm	**AC 6/12 kV**	**Back up**	**DIN 43625 · IEC 60282-1**

Rated current	Part No.	D= Diameter inch	D= Diameter mm	Rated breaking current kA	Weight (kg/1)	Pack
6.3 A	30 119 13	2.10	53	63	1.2	1
10 A	30 119 13	2.10	53	63	1.2	1
16 A	30 119 13	2.10	53	63	1.2	1
20 A	30 267 13	2.64	67	63	1.5	1
25 A	30 267 13	2.64	67	63	1.5	1
31.5 A	30 267 13	2.64	67	63	1.5	1
40 A	30 267 13	2.64	67	63	1.5	1
50 A	30 267 13	2.64	67	63	1.5	1
63 A	30 267 13	2.64	67	63	1.5	1

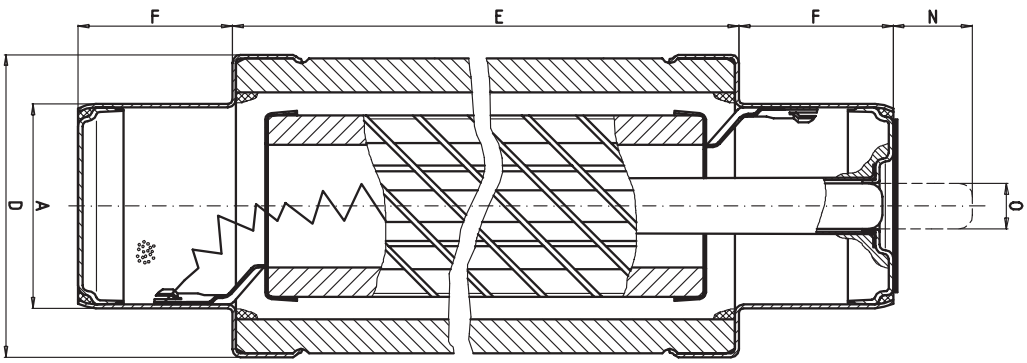

A	1.77 ”	(45 mm)
F	1.30 ”	(33 mm)
O	0.40 ”	(10 mm)
N	1.38 ”	(35 mm)

HIGH VOLTAGE FUSES

GERMAN DIN STANDARD

FOR AIR & GAS INSULATED SWITCHGEARS
OUTDOOR SWITCHGEARS

DIN Size	Rated voltage	Class	Standard
E= 292 mm	**AC 6/12 kV**	**Back up**	**DIN 43625 · IEC 60282-1**

Rated current	Part No.	D= Diameter inch	D= Diameter mm	Rated breaking current kA	Weight (kg/1)	Pack
6.3 A	30 004 13	2.10	53	63	1.6	1
10 A	30 004 13	2.10	53	63	1.6	1
16 A	30 004 13	2.10	53	63	1.6	1
20 A	30 004 13	2.10	53	63	1.6	1
25 A	30 004 13	2.10	53	63	1.6	1
31.5 A	30 004 13	2.10	53	63	1.6	1
40 A	30 004 13	2.10	53	63	1.6	1
50 A	30 004 13	2.10	53	63	1.6	1
63 A	30 012 13	2.64	67	63	2.0	1
80 A	30 012 13	2.64	67	63	2.0	1
100 A	30 012 13	2.64	67	63	2.0	1
125 A	30 012 13	2.64	67	63	2.0	1
160 A	30 020 13	3.35	85	63	3.8	1
200 A	30 020 14	3.35	85	50	3.8	1

Prefered Standard size 6/12 kV

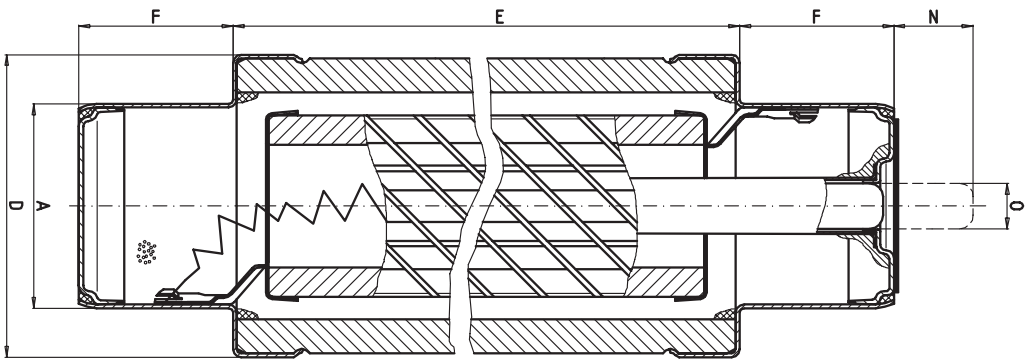

A	1.77 ”	(45 mm)
F	1.30 ”	(33 mm)
O	0.40 ”	(10 mm)
N	1.38 ”	(35 mm)

HHD

SIBA FUSES

HIGH VOLTAGE FUSES
GERMAN DIN STANDARD

FOR AIR & GAS INSULATED SWITCHGEARS
OUTDOOR SWITCHGEARS

DIN Size	Rated voltage	Class	Standard
E= 442 mm	**AC 6/12 kV**	**Back up**	**DIN 43625 · IEC 60282-1**

Rated current	Part No.	D= Diameter inch	D= Diameter mm	Rated breaking current kA	Weight (kg/1)	Pack
6.3 A	30 101 13	2.10	53	63	2.2	1
10 A	30 101 13	2.10	53	63	2.2	1
16 A	30 101 13	2.10	53	63	2.2	1
20 A	30 101 13	2.10	53	63	2.2	1
25 A	30 101 13	2.10	53	63	2.2	1
31.5 A	30 101 13	2.10	53	63	2.2	1
40 A	30 101 13	2.10	53	63	2.2	1
50 A	30 101 13	2.10	53	63	2.2	1
63 A	30 102 13	2.64	67	63	2.9	1
80 A	30 102 13	2.64	67	63	2.9	1
100 A	30 102 13	2.64	67	63	2.9	1
125 A	30 102 13	2.64	67	63	2.9	1
160 A	30 103 13	3.35	85	63	5.4	1
200 A	30 103 14	3.35	85	50	5.4	1
250 A	30 103 14	3.35	85	50	5.4	1

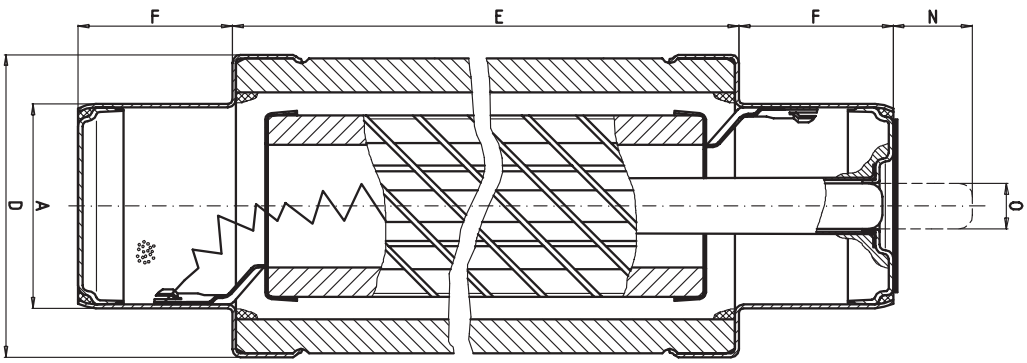

A	**1.77 ”**	(45 mm)
F	**1.30 ”**	(33 mm)
O	**0.40 ”**	(10 mm)
N	**1.38 ”**	(35 mm)

SIBA FUSES

HHD

HIGH VOLTAGE FUSES
GERMAN DIN STANDARD

FOR AIR & GAS INSULATED SWITCHGEARS
OUTDOOR SWITCHGEARS

DIN Size	Rated voltage	Class	Standard
E= 537 mm	**AC 6/12 kV**	**Back up**	**DIN 43625 · IEC 60282-1**

Rated current	Part No.	D= Diameter inch	D= Diameter mm	Rated breaking current kA	Weight (kg/1)	Pack
100 A	30 211 13	3.35	85	63	6.8	1
125 A	30 211 13	3.35	85	63	6.8	1
160 A	30 211 13	3.35	85	63	6.8	1
200 A	30 211 14	3.35	85	50	6.8	1
250 A	30 211 14	3.35	85	50	6.8	1
315 A	30 211 14	3.35	85	50	6.8	1

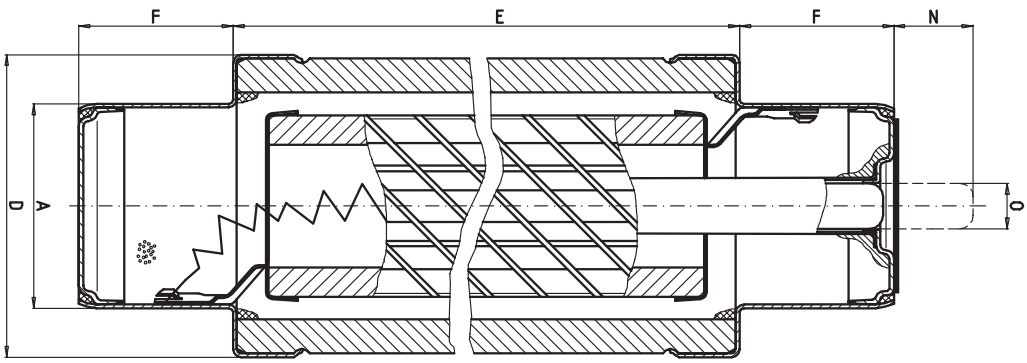

A	**1.77 ”**	(45 mm)
F	**1.30 ”**	(33 mm)
O	**0.40 ”**	(10 mm)
N	**1.38 ”**	(35 mm)

HHD

SIBA FUSES

HIGH VOLTAGE FUSES
GERMAN DIN STANDARD

FOR AIR & GAS INSULATED SWITCHGEARS
OUTDOOR SWITCHGEARS

DIN Size	Rated voltage	Class	Standard
E= 292 mm	**AC 10/17.5 kV**	**Back up**	**DIN 43625 · IEC 60282-1**

Rated current	Part No.	D= Diameter inch	D= Diameter mm	Rated breaking current kA	Weight (kg/1)	Pack
6.3 A	30 255 13	2.10	53	63	1.6	1
10 A	30 255 13	2.10	53	63	1.6	1
16 A	30 255 13	2.10	53	63	1.6	1
20 A	30 221 13	2.64	67	63	2.0	1
25 A	30 221 13	2.64	67	63	2.0	1
31.5 A	30 221 13	2.64	67	63	2.0	1
40 A	30 221 13	2.64	67	63	2.0	1
50 A	30 221 13	2.64	67	63	2.0	1
63 A	30 221 13	2.64	67	63	2.0	1
80 A	30 222 13	3.35	85	63	3.8	1
100 A	30 222 13	3.35	85	63	3.8	1
125 A	30 222 13	3.35	85	63	3.8	1
160 A	30 222 13	3.35	85	63	3.8	1

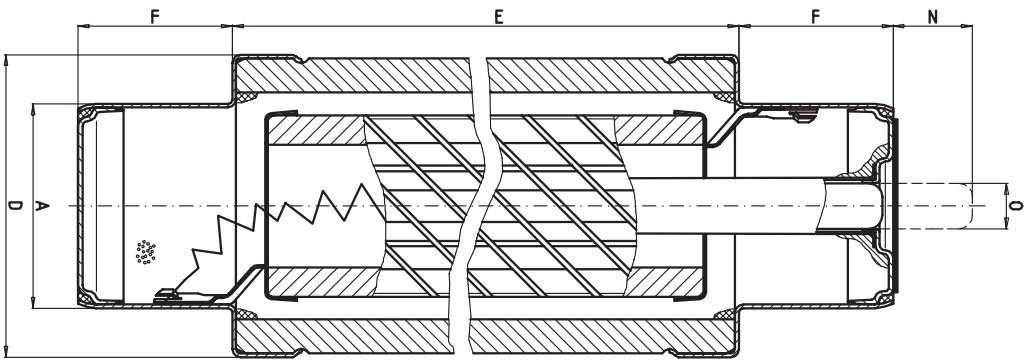

A	**1.77 ”**	(45 mm)
F	**1.30 ”**	(33 mm)
O	**0.40 ”**	(10 mm)
N	**1.38 ”**	(35 mm)

HIGH VOLTAGE FUSES

GERMAN DIN STANDARD

FOR AIR & GAS INSULATED SWITCHGEARS
OUTDOOR SWITCHGEARS

DIN Size	Rated voltage	Class	Standard
E= 367 mm	**AC 10/17.5 kV**	**Back up**	**DIN 43625 · IEC 60282-1**

Rated current	Part No.	D= Diameter inch	D= Diameter mm	Rated breaking current kA	Weight (kg/1)	Pack
6.3 A	30 176 13	2.10	53	63	2.0	1
10 A	30 176 13	2.10	53	63	2.0	1
16 A	30 176 13	2.10	53	63	2.0	1
20 A	30 176 13	2.10	53	63	2.0	1
25 A	30 176 13	2.10	53	63	2.0	1
31.5 A	30 177 13	2.64	67	63	3.0	1
40 A	30 177 13	2.64	67	63	3.0	1
50 A	30 177 13	2.64	67	63	3.0	1
63 A	30 177 13	2.64	67	63	3.0	1
80 A	30 178 13	3.35	85	63	4.8	1
100 A	30 178 13	3.35	85	63	4.8	1
125 A	30 178 13	3.35	85	63	4.8	1
160 A	30 178 13	3.35	85	63	4.8	1
200 A	30 178 14	3.35	85	40	4.8	1

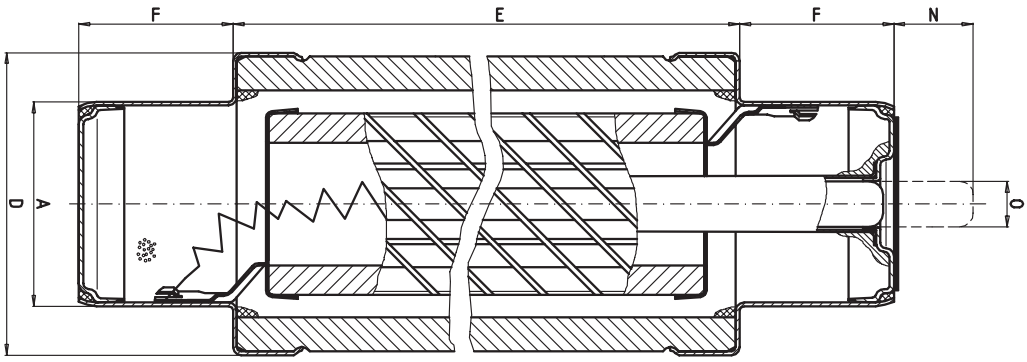

A	1.77 ”	(45 mm)
F	1.30 ”	(33 mm)
O	0.40 ”	(10 mm)
N	1.38 ”	(35 mm)

HHD

SIBA FUSES

HIGH VOLTAGE FUSES
GERMAN DIN STANDARD

FOR AIR & GAS INSULATED SWITCHGEARS
OUTDOOR SWITCHGEARS

DIN Size	Rated voltage	Class	Standard
E= 442 mm	**AC 10/17.5 kV**	**Back up**	**DIN 43625 · IEC 60282-1**

Rated current	Part No.	D= Diameter inch	D= Diameter mm	Rated breaking current kA	Weight (kg/1)	Pack
6.3 A	30 231 13	2.10	53	63	2.2	1
10 A	30 231 13	2.10	53	63	2.2	1
16 A	30 231 13	2.10	53	63	2.2	1
20 A	30 231 13	2.10	53	63	2.2	1
25 A	30 231 13	2.10	53	63	2.2	1
31.5 A	30 231 13	2.10	53	63	2.2	1
40 A	30 231 13	2.10	53	63	2.2	1
50 A	30 232 13	2.64	67	63	2.9	1
63 A	30 232 13	2.64	67	63	2.9	1
80 A	30 232 13	2.64	67	63	2.9	1
100 A	30 233 13	3.35	85	63	5.4	1
125 A	30 233 13	3.35	85	63	5.4	1
160 A	30 233 13	3.35	85	63	5.4	1
200 A	30 233 14	3.35	85	40	5.4	1

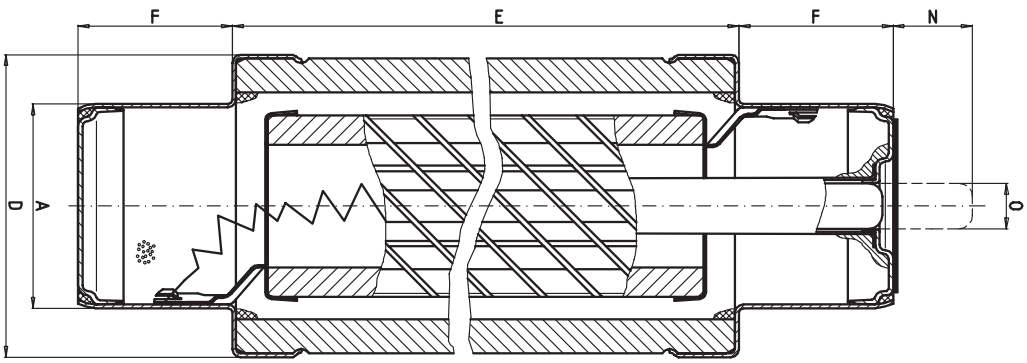

A	**1.77 ”** (45 mm)
F	**1.30 ”** (33 mm)
O	**0.40 ”** (10 mm)
N	**1.38 ”** (35 mm)

HIGH VOLTAGE FUSES

GERMAN DIN STANDARD

FOR AIR & GAS INSULATED SWITCHGEARS
OUTDOOR SWITCHGEARS

DIN Size	Rated voltage	Class	Standard
E= 292 mm	**AC 10/24 kV**	**Back up**	**DIN 43625 · IEC 60282-1**

Rated current	Part No.	D= Diameter inch	D= Diameter mm	Rated breaking current kA	Weight (kg/1)	Pack
6.3 A	30 180 13	2.10	53	31.5	1.6	1
10 A	30 180 13	2.10	53	31.5	1.6	1
16 A	30 180 13	2.10	53	31.5	1.6	1
20 A	30 225 13	2.64	67	31.5	2.0	1
25 A	30 225 13	2.64	67	31.5	2.0	1
31.5 A	30 225 13	2.64	67	31.5	2.0	1
40 A	30 225 13	2.64	67	31.5	2.0	1
50 A	30 225 13	2.64	67	31.5	2.0	1
63 A	30 225 13	2.64	67	31.5	2.0	1

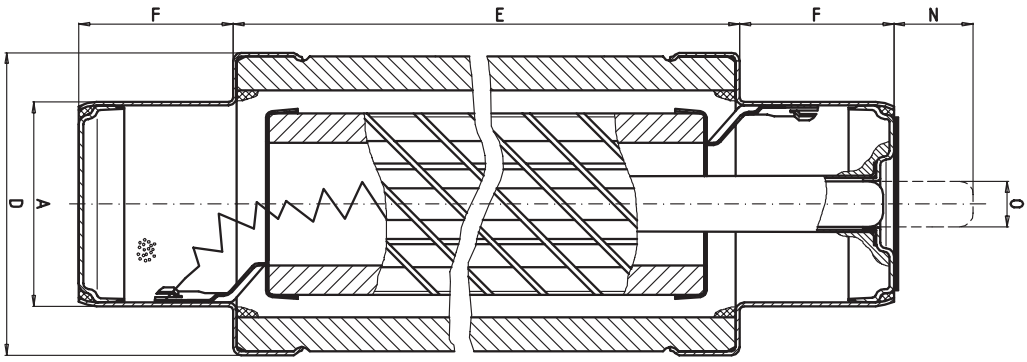

A	1.77 ”	(45 mm)
F	1.30 ”	(33 mm)
O	0.40 ”	(10 mm)
N	1.38 ”	(35 mm)

HHD

SIBA FUSES

HIGH VOLTAGE FUSES
GERMAN DIN STANDARD

FOR AIR & GAS INSULATED SWITCHGEARS
OUTDOOR SWITCHGEARS

DIN Size	Rated voltage	Class	Standard
E= 442 mm	**AC 10/24 kV**	**Back up**	**DIN 43625 · IEC 60282-1**

Rated current	Part No.	D= Diameter inch	D= Diameter mm	Rated breaking current kA	Weight (kg/1)	Pack
6.3 A	30 006 13	2.10	53	63	2.2	1
10 A	30 006 13	2.10	53	63	2.2	1
16 A	30 006 13	2.10	53	63	2.2	1
20 A	30 006 13	2.10	53	63	2.2	1
25 A	30 006 13	2.10	53	63	2.2	1
31.5 A	30 006 13	2.10	53	63	2.2	1
40 A	30 006 13	2.10	53	63	2.2	1
50 A	30 014 13	2.64	67	63	2.9	1
63 A	30 014 13	2.64	67	63	2.9	1
80 A	30 014 13	2.64	67	63	2.9	1
100 A	30 022 13	3.35	85	63	5.4	1
125 A	30 022 13	3.35	85	40	5.4	1

Prefered Standard size 10/24 kV

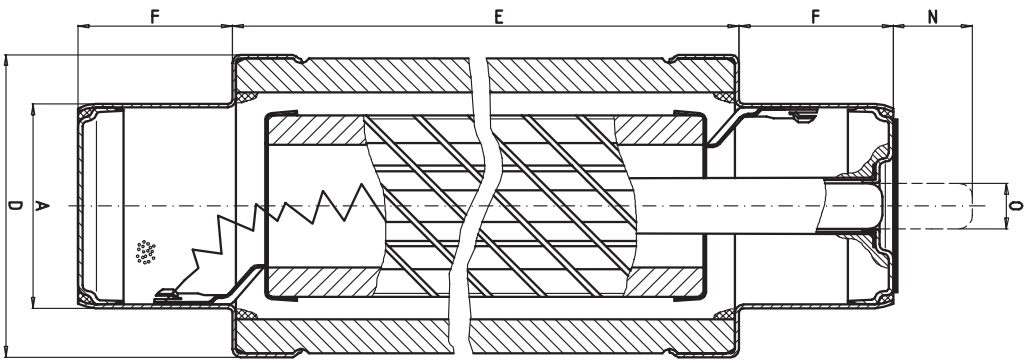

A	**1.77 ”**	(45 mm)
F	**1.30 ”**	(33 mm)
O	**0.40 ”**	(10 mm)
N	**1.38 ”**	(35 mm)

HIGH VOLTAGE FUSES

GERMAN DIN STANDARD

FOR AIR & GAS INSULATED SWITCHGEARS
OUTDOOR SWITCHGEARS

DIN Size	Rated voltage	Class	Standard
E= 537 mm	**AC 10/24 kV**	**Back up**	**DIN 43625 · IEC 60282-1**

Rated current	Part No.	D= Diameter inch	D= Diameter mm	Rated breaking current kA	Weight (kg/1)	Pack
6.3 A	30 203 13	2.10	53	63	2.8	1
10 A	30 203 13	2.10	53	63	2.8	1
16 A	30 203 13	2.10	53	63	2.8	1
20 A	30 203 13	2.10	53	63	2.8	1
25 A	30 203 13	2.10	53	63	2.8	1
31.5 A	30 203 13	2.10	53	63	2.8	1
40 A	30 203 13	2.10	53	63	2.8	1
50 A	30 204 13	2.64	67	63	3.7	1
63 A	30 204 13	2.64	67	63	3.7	1
80 A	30 204 13	2.64	67	63	3.7	1
100 A	30 196 13	3.35	85	63	6.8	1
125 A	30 196 13	3.35	85	40	6.8	1
160 A	30 196 13	3.35	85	31.5	6.8	1
200 A	30 196 14	3.35	85	31.5	6.8	1
250 A	30 196 14	3.35	85	31.5	6.8	1

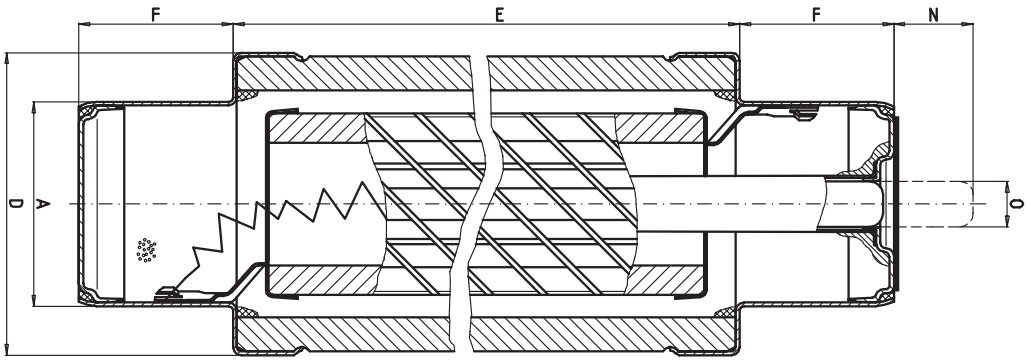

A	1.77 ”	(45 mm)
F	1.30 ”	(33 mm)
O	0.40 ”	(10 mm)
N	1.38 ”	(35 mm)

HHD

SIBA FUSES

HIGH VOLTAGE FUSES
GERMAN DIN STANDARD

FOR AIR & GAS INSULATED SWITCHGEARS
OUTDOOR SWITCHGEARS

DIN Size	Rated voltage	Class	Standard
E= 442 mm	**AC 20/36 kV**	**Back up**	**DIN 43625 · IEC 60282-1**

Rated current	Part No.	D= Diameter inch	D= Diameter mm	Rated breaking current kA	Weight (kg/1)	Pack
6.3 A	30 181 13	2.10	53	20	2.2	1
10 A	30 181 13	2.10	53	20	2.2	1
16 A	30 181 13	2.10	53	20	2.2	1

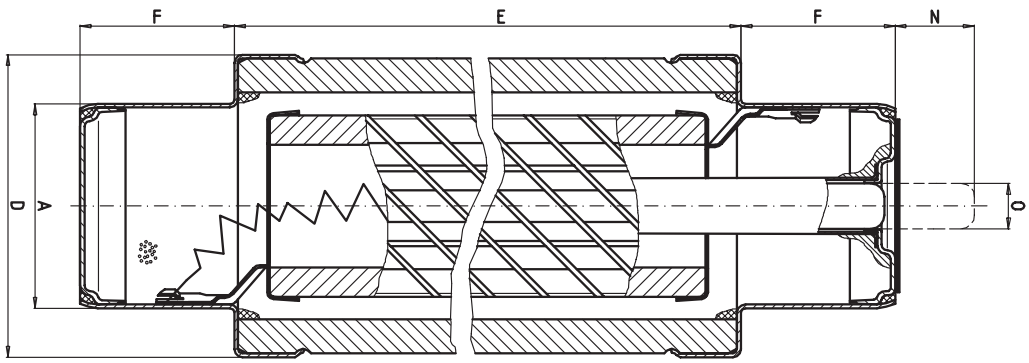

A	**1.77 ”**	(45 mm)
F	**1.30 ”**	(33 mm)
O	**0.40 ”**	(10 mm)
N	**1.38 ”**	(35 mm)

HIGH VOLTAGE FUSES

GERMAN DIN STANDARD

FOR AIR & GAS INSULATED SWITCHGEARS
OUTDOOR SWITCHGEARS

DIN Size	Rated voltage	Class	Standard
E= 537 mm	**AC 20/36 kV**	**Back up**	**DIN 43625 · IEC 60282-1**

Rated current	Part No.	D= Diameter inch	D= Diameter mm	Rated breaking current kA	Weight (kg/1)	Pack
6.3 A	30 008 13	2.10	53	40	2.6	1
10 A	30 008 13	2.10	53	40	2.6	1
16 A	30 008 13	2.10	53	40	2.6	1
20 A	30 008 13	2.10	53	40	2.6	1
25 A	30 008 13	2.10	53	40	2.6	1
31.5 A	30 016 13	2.64	67	40	3.5	1
40 A	30 016 13	2.64	67	40	3.5	1
50 A	30 024 13	3.35	85	40	6.0	1
63 A	30 024 13	3.35	85	40	6.0	1
80 A	30 024 13	3.35	85	40	6.0	1

Prefered Standard size 20/36 kV

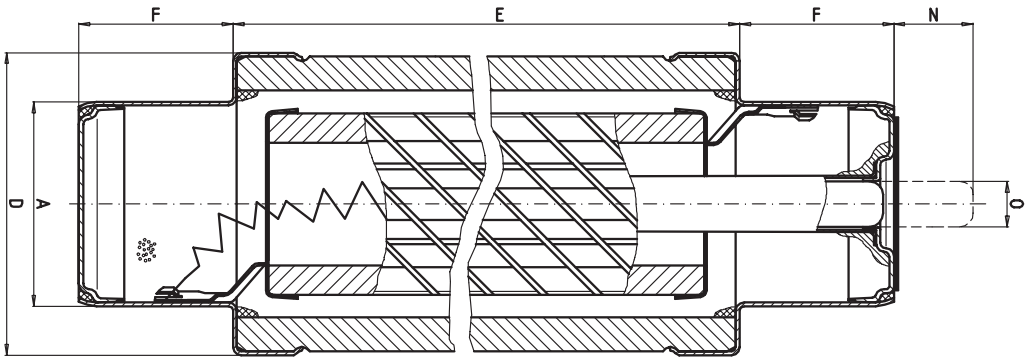

A	1.77 ”	(45 mm)
F	1.30 ”	(33 mm)
O	0.40 ”	(10 mm)
N	1.38 ”	(35 mm)

HIGH VOLTAGE FUSES

GERMAN DIN STANDARD – GENERAL PURPOSE

FOR
AIR & GAS INSULATED SWITCHGEARS
OUTDOOR SWITCHGEARS

VS-Protector for the overload and short-circuit range

- According IEC 60 282-1 and VDE 0670 Part 4, a General-Purpose-Fuse interrupts fault currents between the rated breaking current and the current which causes melting within one hour. The protection range of the SIBA-VS-Protector extends this basic demand. The minimum breaking current is about 1.5 times the rated current. In combination with the temperature released striker pin a full range protection is possible. Additional feature is the small powerloss of the VS-Protector. It is up to 40 % smaller than the standard DIN-fuse.

- The dimensions of the VS-Protector are according to DIN 43625. The rated voltages 12 and 24 kV and also the available current ratings allow protection of transformers up to 630 kVA.

- The function of the VS-Protector is comparable to a typical Back up Fuse link. The melting elements of pure silver are wound inside onto a ceramic support. A short section in the center of the fuse is designed as a “Heat chamber”. Inside this chamber the elements are made of silver-alloy. They generate a certain level of temperature at overloads. As a result the fuses interrupt at low fault-currents without ageing.

HIGH VOLTAGE FUSES

GERMAN DIN STANDARD

FOR AIR & GAS INSULATED SWITCHGEARS
OUTDOOR SWITCHGEARS

DIN Size	Rated voltage	Class	Standard
E= 292 mm	**AC 6/12 kV**	**General purpose**	**DIN 43625 · IEC 60282-1**

Rated current	Part No.	D= Diameter inch	D= Diameter mm	Rated breaking current kA	Weight (kg/1)	Pack
6.3 A	30 004 93	2.10	53	63	1.6	1
8 A	30 012 13	2.64	67	63	2.0	1
10 A	30 012 93	2.64	67	63	2.0	1
16 A	30 012 93	2.64	67	63	2.0	1
20 A	30 012 93	2.64	67	63	2.0	1
25 A	30 012 93	2.64	67	63	2.0	1
31.5 A	30 012 93	2.64	67	63	2.0	1
40 A	30 012 93	2.64	67	63	2.0	1
50 A	30 020 93	3.35	85	63	3.8	1
63 A	30 020 93	3.35	85	63	3.8	1
80 A	30 020 93	3.35	85	63	3.8	1
100 A	30 020 93	3.35	85	63	3.8	1

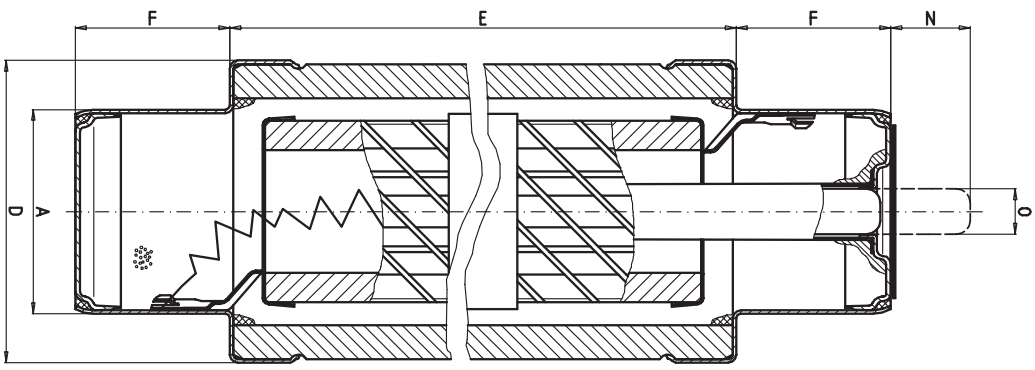

A	1.77 ”	(45 mm)
F	1.30 ”	(33 mm)
O	0.40 ”	(10 mm)
N	1.38 ”	(35 mm)

HHD

SIBA FUSES

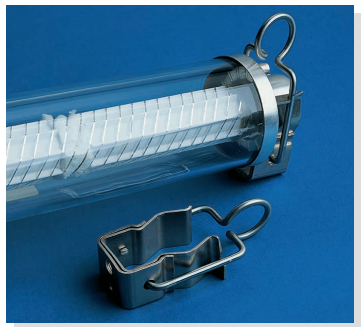

HIGH VOLTAGE FUSES
GERMAN DIN STANDARD

FOR AIR & GAS INSULATED SWITCHGEARS
OUTDOOR SWITCHGEARS

DIN Size	Rated voltage	Class	Standard
E= 442 mm	**AC 10/24 kV**	**General purpose**	**DIN 43625 · IEC 60282-1**

Rated current	Part No.	D= Diameter inch	D= Diameter mm	Rated breaking current kA	Weight (kg/1)	Pack
6.3 A	30 006 93	2.10	53	40	2.2	1
10 A	30 014 93	2.64	67	40	2.9	1
16 A	30 014 93	2.64	67	40	2.9	1
20 A	30 014 93	2.64	67	40	2.9	1
25 A	30 014 93	2.64	67	40	2.9	1
31.5 A	30 022 93	3.35	85	40	5.4	1
40 A	30 022 93	3.35	85	40	5.4	1

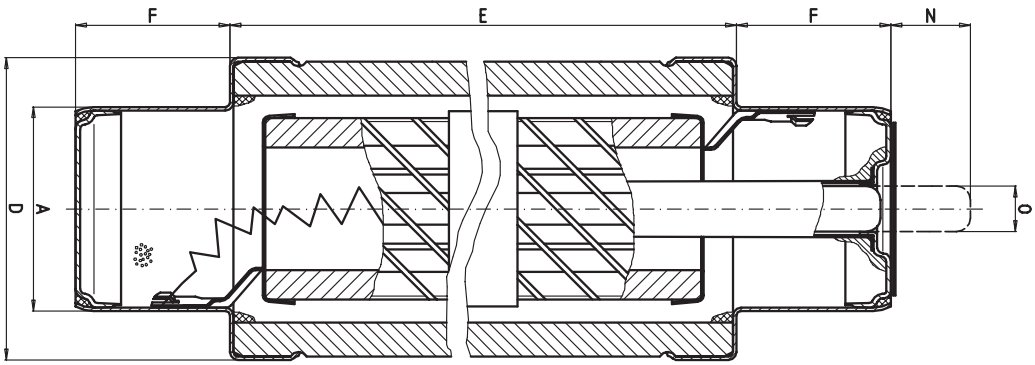

A	**1.77 ”**	(45 mm)
F	**1.30 ”**	(33 mm)
O	**0.40 ”**	(10 mm)
N	**1.38 ”**	(35 mm)

DIN Size	Rated voltage	Class
E= 192 mm	**AC 3/7.2 kV**	**Back up**

Rated current	Part No.	Rated breaking current kA	Minimum breaking current A	Cold resistance mOhm	Power loss W	Pre-arcing I^2t-value A^2s	Total I^2t value @ 3 kV A^2s	Total I^2t value @ 7.2 kV A^2s
6.3 A	30 002 13	63	22	178.0	10	45	210	360
10 A	30 002 13	63	34	113.0	17	75	350	560
16 A	30 002 13	63	56	50.0	17	250	1,100	2,000
20 A	30 002 13	63	70	27.0	13	640	2,900	4,800
25 A	30 002 13	63	90	21.0	16	1,050	4,700	7,500
31.5 A	30 002 13	63	110	17.0	21	1,700	6,600	12,000
40 A	30 002 13	63	140	13.0	27	2,900	12,000	19,000
50 A	30 002 13	63	170	9.3	30	5,700	20,000	33,000
63 A	30 010 13	63	210	6.8	38	10,700	40,000	66,000
80 A	30 010 13	63	280	4.8	47	21,000	78,000	140,000
100 A	30 010 13	63	320	3.8	64	33,000	130,000	210,000
125 A	30 010 13	63	390	3.3	98	47,000	180,000	390,000
160 A	30 018 13	63	600	2.4	124	90,000	330,000	570,000
200 A	30 018 14	50	800	1.9	146	230,000	480,000	704,000
250 A	30 018 14	50	1,000	1.6	210	371,000	750,000	1,101,000

DIN Size	Rated voltage	Class
E= 292 mm	**AC 3/7.2 kV**	**Back up**

Rated current	Part No.	Rated breaking current kA	Minimum breaking current A	Cold resistance mOhm	Power loss W	Pre-arcing I^2t-value A^2s	Total I^2t value @ 3 kV A^2s	Total I^2t value @ 7.2 kV A^2s
6.3 A	30 098 13	63	22	178.0	10	45	210	360
10 A	30 098 13	63	34	113.0	17	75	350	560
16 A	30 098 13	63	56	50.0	17	250	1,100	2,000
20 A	30 098 13	63	70	27.0	13	640	2,900	4,800
25 A	30 098 13	63	90	21.0	16	1,050	4,700	7,500
31.5 A	30 098 13	63	110	17.0	21	1,700	6,600	12,000
40 A	30 098 13	63	140	13.0	27	2,900	12,000	19,000
50 A	30 098 13	63	170	9.3	30	5,700	20,000	33,000
63 A	30 099 13	63	210	6.8	38	10,700	40,000	66,000
80 A	30 099 13	63	280	4.8	47	21,000	78,000	140,000
100 A	30 099 13	63	320	3.8	64	33,000	130,000	210,000
125 A	30 099 13	63	390	3.3	98	47,000	180,000	390,000
160 A	30 100 13	63	600	2.3	103	90,000	330,000	570,000
200 A	30 100 14	50	800	1.9	134	230,000	480,000	704,000
250 A	30 100 14	50	1,000	1.6	191	371,000	750,000	1,101,000
315 A	30 100 14	50	1,260	1.2	281	545,000	1,066,000	1,616,000
355 A	30 100 14	50	1,420	1.0	336	825,000	1,420,000	2,225,000

TIME CURRENT CHARACTERISTICS AND CUT OFF CURRENT DIAGRAM
PLEASE REFER TO PAGES HHD 33 AND HHD 34

DIN Size	Rated voltage	Class
E= 442 mm	**AC 3/7.2 kV**	**Back up**

Rated current	Part No.	Rated breaking current kA	Minimum breaking current A	Cold resistance mOhm	Power loss W	Pre-arcing I^2t-value A^2s	Total I^2t value @ 3 kV A^2s	Total I^2t value @ 7.2 kV A^2s
100 A	30 109 13	63	320	3.8	64	33,000	130,000	210,000
125 A	30 109 13	63	390	3.3	98	47,000	180,000	390,000
160 A	30 110 13	63	600	2.3	85	90,000	330,000	570,000
200 A	30 110 14	50	800	2.1	155	230,000	480,000	704,000
250 A	30 110 14	50	1,000	1.8	233	371,000	750,000	1,101,000
315 A	30 110 14	50	1,260	1.5	281	545,000	1,066,000	1,616,000
355 A	30 110 14	50	1,420	1.3	320	825,000	1,420,000	2,225,000
400 A	30 110 14	50	1,600	1.1	347	1,000,000	1,900,000	2,528,000
500 A	30 110 14	50	2,000	0.85	430	1,668,000	3,162,000	4,500,000

TIME CURRENT CHARACTERISTICS AND CUT OFF CURRENT DIAGRAM
PLEASE REFER TO PAGES HHD 33 AND HHD 34

DIN Size	Rated voltage	Class
E= 192 mm	**AC 6/12 kV**	**Back up**

Rated current	Part No.	Rated breaking current kA	Minimum breaking current A	Cold resistance mOhm	Power loss W	Pre-arcing I^2t-value A^2s	Total I^2t value @ 6 kV A^2s	Total I^2t value @ 12 kV A^2s
6.3 A	30 119 13	63	22	297	16	45	210	360
10 A	30 119 13	63	34	189	28	75	350	560
16 A	30 119 13	63	56	87	28	250	1,100	2,000
20 A	30 267 13	63	70	46	23	640	2,900	4,800
25 A	30 267 13	63	90	36	29	1,050	4,700	7,500
31.5 A	30 267 13	63	110	29	38	1,700	6,600	12,000
40 A	30 267 13	63	140	22	50	2,900	12,000	19,000
50 A	30 267 13	63	170	16	56	5,700	20,000	33,000
63 A	30 267 13	63	210	12	63	10,700	40,000	66,000

DIN Size	Rated voltage	Class
E= 292 mm	**AC 6/12 kV**	**Back up**

Rated current	Part No.	Rated breaking current kA	Minimum breaking current A	Cold resistance mOhm	Power loss W	Pre-arcing I^2t-value A^2s	Total I^2t value @ 6 kV A^2s	Total I^2t value @ 12 kV A^2s
6.3 A	30 004 13	63	22	297.0	16	45	210	360
10 A	30 004 13	63	34	189.0	28	75	350	560
16 A	30 004 13	63	56	84.0	28	250	1,100	2,000
20 A	30 004 13	63	70	45.0	23	640	2,900	4,800
25 A	30 004 13	63	90	34.0	29	1,050	4,700	7,500
31.5 A	30 004 13	63	110	28.0	38	1,700	6,600	12,000
40 A	30 004 13	63	140	22.0	50	2,900	12,000	19,000
50 A	30 004 13	63	170	16.0	56	5,700	20,000	33,000
63 A	30 012 13	63	210	12.0	63	10,700	40,000	66,000
80 A	30 012 13	63	280	8.5	76	21,000	78,000	140,000
100 A	30 012 13	63	320	6.5	104	33,000	130,000	210,000
125 A	30 012 13	63	390	5.5	159	47,000	180,000	390,000
160 A	30 020 13	63	600	3.9	173	90,000	330,000	570,000
200 A	30 020 14	50	800	3.0	234	230,000	480,000	704,000

TIME CURRENT CHARACTERISTICS AND CUT OFF CURRENT DIAGRAM
PLEASE REFER TO PAGES HHD 33 AND HHD 34

DIN Size	Rated voltage	Class
E= 442 mm	**AC 6/12 kV**	**Back up**

Rated current	Part No.	Rated breaking current kA	Minimum breaking current A	Cold resistance mOhm	Power loss W	Pre-arcing I^2t-value A^2s	Total I^2t value @ 6 kV A^2s	Total I^2t value @ 12 kV A^2s
6.3 A	30 101 13	63	22	297.0	16	45	210	360
10 A	30 101 13	63	34	189.0	28	75	350	560
16 A	30 101 13	63	56	87.0	19	250	1,100	2,000
20 A	30 101 13	63	70	46.0	22	640	2,900	4,800
25 A	30 101 13	63	90	36.0	28	1,050	4,700	7,500
31.5 A	30 101 13	63	110	29.0	37	1,700	6,600	12,000
40 A	30 101 13	63	140	22.0	48	2,900	12,000	19,000
50 A	30 101 13	63	170	16.0	54	5,700	20,000	33,000
63 A	30 102 13	63	210	12.0	58	10,700	40,000	66,000
80 A	30 102 13	63	280	8.5	70	21,000	78,000	140,000
100 A	30 102 13	63	320	6.5	96	33,000	130,000	210,000
125 A	30 102 13	63	390	5.5	147	47,000	180,000	390,000
160 A	30 103 13	63	600	3.9	172	90,000	330,000	570,000
200 A	30 103 14	50	800	2.9	193	230,000	480,000	704,000
250 A	30 103 14	50	1,000	2.6	269	371,000	750,000	1,101,000

DIN Size	Rated voltage	Class
E= 537 mm	**AC 6/12 kV**	**Back up**

Rated current	Part No.	Rated breaking current kA	Minimum breaking current A	Cold resistance mOhm	Power loss W	Pre-arcing I^2t-value A^2s	Total I^2t value @ 6 kV A^2s	Total I^2t value @ 12 kV A^2s
100 A	30 211 13	63	320	6.5	96	33,000	130,000	210,000
125 A	30 211 13	63	390	5.5	147	47,000	180,000	390,000
160 A	30 211 13	63	600	3.9	172	90,000	330,000	570,000
200 A	30 211 14	50	800	3.2	193	230,000	480,000	704,000
250 A	30 211 14	50	1,000	2.6	274	371,000	750,000	1,101,000
315 A	30 211 14	50	1,260	2.2	382	545,000	1,066,000	1,616,000

TIME CURRENT CHARACTERISTICS AND CUT OFF CURRENT DIAGRAM
PLEASE REFER TO PAGES HHD 33 AND HHD 34

DIN Size	Rated voltage	Class
E= 292 mm	**AC10/17.5 kV**	**Back up**

Rated current	Part No.	Rated breaking current kA	Minimum breaking current A	Cold resistance mOhm	Power loss W	Pre-arcing I²t-value A²s	Total I²t value @ 10 kV A²s	Total I²t value @ 17.5 kV A²s
6.3 A	30 255 13	53	22	397.0	21	45	210	360
10 A	30 255 13	53	34	252.0	38	75	350	560
16 A	30 255 13	53	56	116.0	37	250	1,100	2,000
20 A	30 221 13	63	70	62.0	40	640	2,900	4,800
25 A	30 221 13	63	90	48.0	56	1,050	4,700	7,500
31.5 A	30 221 13	63	110	39.0	65	1,700	6,600	12,000
40 A	30 221 13	63	140	29.0	84	2,900	12,000	19,000
50 A	30 221 13	63	170	21.0	101	5,700	20,000	33,000
63 A	30 222 13	85	210	16.0	106	10,700	40,000	66,000
80 A	30 222 13	85	280	11.0	137	21,000	78,000	140,000
100 A	30 222 13	85	320	8.7	182	33,000	130,000	210,000
125 A	30 222 13	85	390	7.5	235	47,000	180,000	390,000
160 A	30 222 13	85	600	5.2	290	90,000	330,000	570,000

DIN Size	Rated voltage	Class
E= 367 mm	**AC 10/17.5 kV**	**Back up**

Rated current	Part No.	Rated breaking current kA	Minimum breaking current A	Cold resistance mOhm	Power loss W	Pre-arcing I²t-value A²s	Total I²t value @ 10 kV A²s	Total I²t value @ 17.5 kV A²s
6.3 A	30 176 13	63	22	397.0	21	45	210	360
10 A	30 176 13	63	34	252.0	38	75	350	560
16 A	30 176 13	63	56	116.0	37	250	1,100	2,000
20 A	30 176 13	63	70	62.0	40	640	2,900	4,800
25 A	30 176 13	63	90	48.0	56	1,050	4,700	7,500
31.5 A	30 177 13	63	110	39.0	65	1,700	6,600	12,000
40 A	30 177 13	63	140	29.0	84	2,900	12,000	19,000
50 A	30 177 13	63	170	21.0	101	5,700	20,000	33,000
63 A	30 177 13	63	210	16.0	106	10,700	40,000	66,000
80 A	30 178 13	63	280	11.0	137	21,000	78,000	140,000
100 A	30 178 13	63	320	8.7	182	33,000	130,000	210,000
125 A	30 178 13	63	390	7.5	235	47,000	180,000	390,000
160 A	30 178 13	63	600	5.2	290	90,000	330,000	570,000
200 A	30 178 14	40	800	3.85	330	230,000	480,000	704,000

TIME CURRENT CHARACTERISTICS AND CUT OFF CURRENT DIAGRAM
PLEASE REFER TO PAGES HHD 33 AND HHD 34

DIN Size	Rated voltage	Class
E= 442 mm	**AC 10/17.5 kV**	**Back up**

Rated current	Part No.	Rated breaking current kA	Minimum breaking current A	Cold resistance mOhm	Power loss W	Pre-arcing I^2t-value A^2s	Total I^2t value @ 10 kV A^2s	Total I^2t value @ 17.5 kV A^2s
6.3 A	30 231 13	63	22	397.0	21	45	210	360
10 A	30 231 13	63	34	252.0	38	75	350	560
16 A	30 231 13	63	56	116.0	37	250	1,100	2,000
20 A	30 231 13	63	70	62.0	42	640	2,900	4,800
25 A	30 231 13	63	90	48.0	56	1,050	4,700	7,500
31.5 A	30 231 13	63	110	39.0	60	1,700	6,600	12,000
40 A	30 231 13	63	140	29.0	84	2,900	12,000	19,000
50 A	30 232 13	63	170	21.0	101	5,700	20,000	33,000
63 A	30 232 13	63	210	16.0	106	10,700	40,000	66,000
80 A	30 232 13	63	280	11.0	137	21,000	78,000	140,000
100 A	30 233 13	63	320	8.7	182	33,000	130,000	210,000
125 A	30 233 13	63	390	7.5	235	47,000	180,000	390,000
160 A	30 233 13	63	600	5.2	290	90,000	330,000	570,000
200 A	30 233 14	40	800	3.85	330	230,000	480,000	704,000

TIME CURRENT CHARACTERISTICS AND CUT OFF CURRENT DIAGRAM
PLEASE REFER TO PAGES HHD 33 AND HHD 34

DIN Size	Rated voltage	Class
E= 292 mm	**AC 10/24 kV**	**Back up**

Rated current	Part No.	Rated breaking current kA	Minimum breaking current A	Cold resistance mOhm	Power loss W	Pre-arcing I^2t-value A^2s	Total I^2t value @ 10 kV A^2s	Total I^2t value @ 24 kV A^2s
6.3 A	30 180 13	31.5	22	546	29	45	210	360
10 A	30 180 13	31.5	34	347	52	75	350	560
16 A	30 180 13	31.5	56	160	59	250	1,100	2,000
20 A	30 225 13	31.5	70	86	46	640	2,900	4,800
25 A	30 225 13	31.5	90	66	56	1,050	4,700	7,500
31.5 A	30 225 13	31.5	110	53	72	1,700	6,600	12,000
40 A	30 225 13	31.5	140	41	106	2,900	12,000	19,000
50 A	30 225 13	31.5	170	29	108	5,700	20,000	33,000
63 A	30 225 13	31.5	210	21	132	10,700	40,000	66,000

DIN Size	Rated voltage	Class
E= 442 mm	**AC 10/24 kV**	**Back up**

Rated current	Part No.	Rated breaking current kA	Minimum breaking current A	Cold resistance mOhm	Power loss W	Pre-arcing I^2t-value A^2s	Total I^2t value @ 10 kV A^2s	Total I^2t value @ 24 kV A^2s
6.3 A	30 006 13	63	22	546	29	45	210	360
10 A	30 006 13	63	34	347	52	75	350	560
16 A	30 006 13	63	56	151	59	250	1,100	2,000
20 A	30 006 13	63	70	83	46	640	2,900	4,800
25 A	30 006 13	63	90	62	56	1,050	4,700	7,500
31.5 A	30 006 13	63	110	52	72	1,700	6,600	12,000
40 A	30 006 13	63	140	41	106	2,900	12,000	19,000
50 A	30 014 13	63	170	29	108	5,700	20,000	33,000
63 A	30 014 13	63	210	22	132	10,700	40,000	66,000
80 A	30 014 13	63	280	16	174	21,000	78,000	140,000
100 A	30 022 13	63	320	13	234	33,000	130,000	210,000
125 A	30 022 13	40	390	11	320	47,000	180,000	390,000

TIME CURRENT CHARACTERISTICS AND CUT OFF CURRENT DIAGRAM
PLEASE REFER TO PAGES HHD 33 AND HHD 34

DIN Size	Rated voltage	Class
E= 537 mm	**AC 10/24 kV**	**Back up**

Rated current	Part No.	Rated breaking current kA	Minimum breaking current A	Cold resistance mOhm	Power loss W	Pre-arcing I^2t-value A^2s	Total I^2t value @ 10 kV A^2s	Total I^2t value @ 24 kV A^2s
6.3 A	30 203 13	63	22	546.0	29	45	210	360
10 A	30 203 13	63	34	347.0	52	75	350	560
16 A	30 203 13	63	56	160.0	57	250	1,100	2,000
20 A	30 203 13	63	70	86.0	45	640	2,900	4,800
25 A	30 203 13	63	90	66.0	55	1,050	4,700	7,500
31.5 A	30 203 13	63	110	53.0	70	1,700	6,600	12,000
40 A	30 203 13	63	140	43.0	103	2,900	12,000	19,000
50 A	30 204 13	63	170	29.0	101	5,700	20,000	33,000
63 A	30 204 13	63	210	21.0	121	10,700	40,000	66,000
80 A	30 204 13	63	280	16.0	147	21,000	78,000	140,000
100 A	30 196 13	63	320	13.0	240	33,000	130,000	210,000
125 A	30 196 13	40	390	11.0	320	47,000	180,000	390,000
160 A	30 196 13	31.5	600	8.0	381	90,000	330,000	570,000
200 A	30 196 14	31.5	800	5.3	440	230,000	480,000	704,000

TIME CURRENT CHARACTERISTICS AND CUT OFF CURRENT DIAGRAM
PLEASE REFER TO PAGES HHD 33 AND HHD 34

DIN Size	Rated voltage	Class
E= 442 mm	**AC 20/36 kV**	**Back up**

Rated current	Part No.	Rated breaking current kA	Minimum breaking current A	Cold resistance mOhm	Power loss W	Pre-arcing I^2t-value A^2s	Total I^2t value @ 20 kV A^2s	Total I^2t value @ 36 kV A^2s
6.3 A	30 181 13	20	22	819	44	45	210	360
10 A	30 181 13	20	34	521	78	75	350	560
16 A	30 181 13	20	56	241	74	250	1,100	3,000

DIN Size	Rated voltage	Class
E= 537 mm	**AC 20/36 kV**	**Back up**

Rated current	Part No.	Rated breaking current kA	Minimum breaking current A	Cold resistance mOhm	Power loss W	Pre-arcing I^2t-value A^2s	Total I^2t value @ 20 kV A^2s	Total I^2t value @ 36 kV A^2s
6.3 A	30 008 13	40	22	819	44	45	210	360
10 A	30 008 13	40	34	521	78	75	350	560
16 A	30 008 13	40	56	241	79	250	1,100	2,000
20 A	30 008 13	40	70	129	66	640	2,900	4,800
25 A	30 008 13	40	90	99	87	1,050	4,700	7,500
31.5 A	30 016 13	40	110	80	102	1,700	6,600	12,000
40 A	30 016 13	40	140	60	144	2,900	12,000	19,000
50 A	30 024 13	40	170	44	186	5,700	20,000	33,000
63 A	30 024 13	40	210	32	224	10,700	40,000	66,000
80 A	30 024 13	40	280	23	280	21,000	78,000	140,000

TIME CURRENT CHARACTERISTICS AND CUT OFF CURRENT DIAGRAM
PLEASE REFER TO PAGES HHD 33 AND HHD 34

DIN Size	Rated voltage	Class
E= 292 mm	**AC 6/12 kV**	**General Purpose**

Rated current	Part No.	Breaking current kA	Cold resistance mOhm	Power loss W	Pre-arcing I^2t-value A^2s	Total I^2t value @ 12 kV A^2s
6.3 A	30 004 93	63	150	7	110	900
8 A	30 012 93	63	120	9	180	1,400
10 A	30 012 93	63	100	12	240	2,000
16 A	30 012 93	63	40	12	530	4,400
20 A	30 012 93	63	31	15	850	7,000
25 A	30 012 93	63	25	18	1,330	11,000
31.5 A	30 012 93	63	20	23	2,100	18,000
40 A	30 012 93	63	16	29	3,400	28,000
50 A	30 020 93	63	15	42	5,500	33,000
63 A	30 020 93	63	12	54	8,500	68,000
80 A	30 020 93	63	9	79	16,200	142,000
100 A	30 020 93	63	7.7	108	23,500	183,000

DIN Size	Rated voltage	Class
E= 442 mm	**AC 10/24 kV**	**General Purpose**

Rated current	Part No.	Breaking current kA	Cold resistance mOhm	Power loss W	Pre-arcing I^2t-value A^2s	Total I^2t value @ 24 kV A^2s
6.3 A	30 006 93	40	273	13	110	900
8 A	30 014 93	40	220	17	180	1,400
10 A	30 014 93	40	180	22	240	2,000
16 A	30 014 93	40	70	19	530	4,400
20 A	30 014 93	40	55	27	850	7,000
25 A	30 014 93	40	45	38	1,330	11,000
31.5 A	30 022 93	40	41	54	2,100	18,000
40 A	30 022 93	40	33	77	3,400	28,000

TIME CURRENT CHARACTERISTICS AND CUT OFF CURRENT DIAGRAM
PLEASE REFER TO PAGE HHD 35

Time Current Characteristics 6,3A - 160A Back up

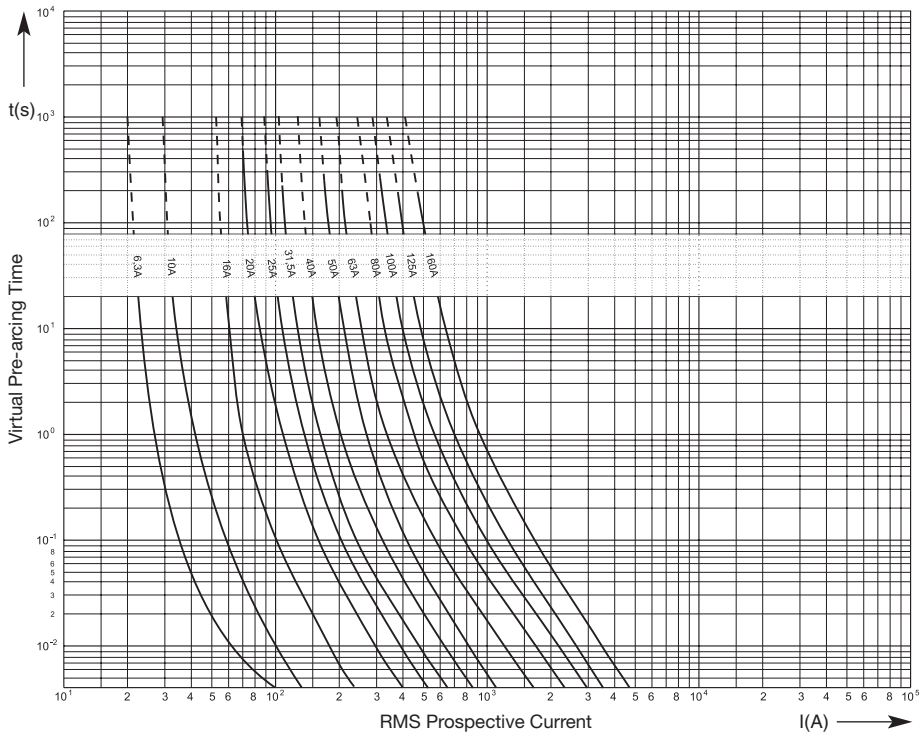

Cut Off Current Diagram 6,3A - 160A Back up

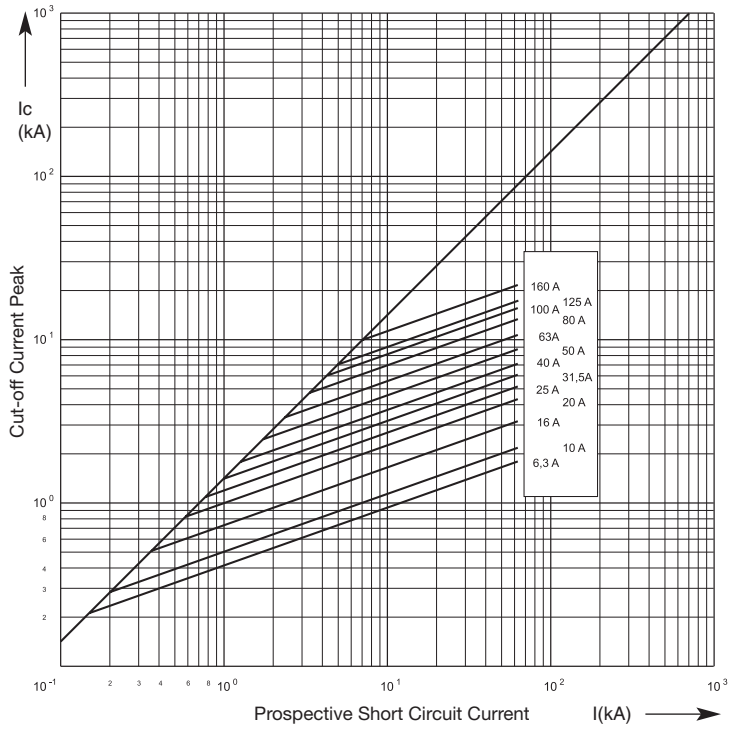

Time Current Characteristics 200A - 500A Back up

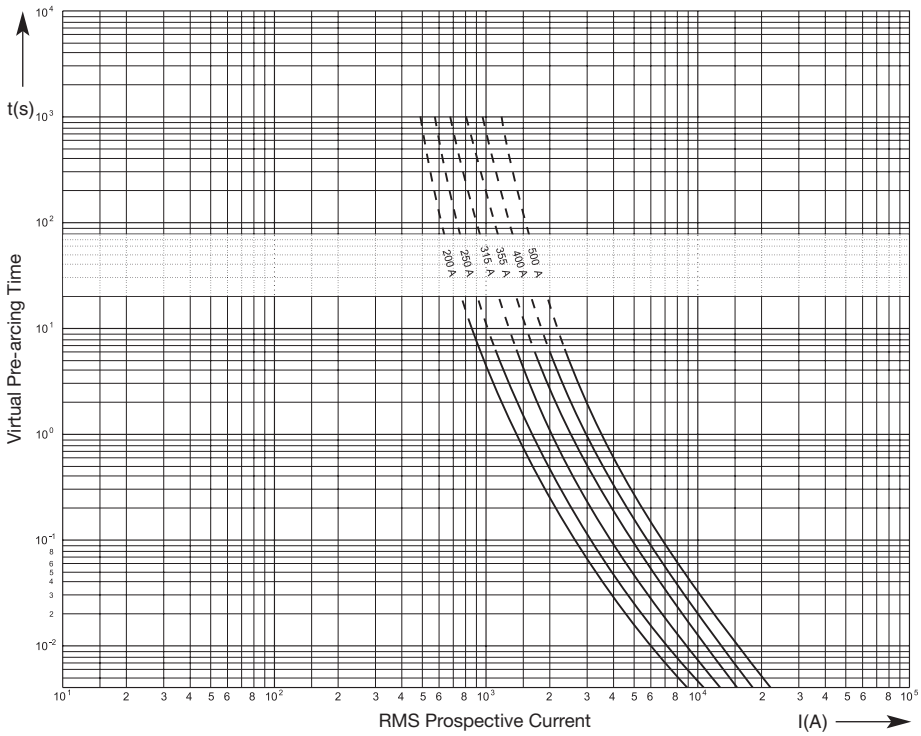

Cut Off Current Diagram 200A - 500A Back up

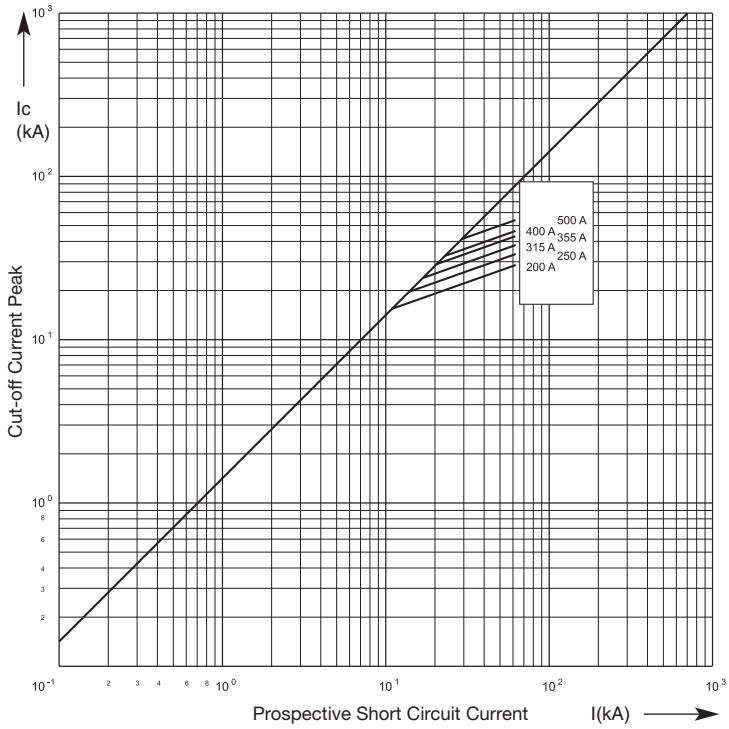

Time Current Characteristics 6,3A - 100A General Purpose

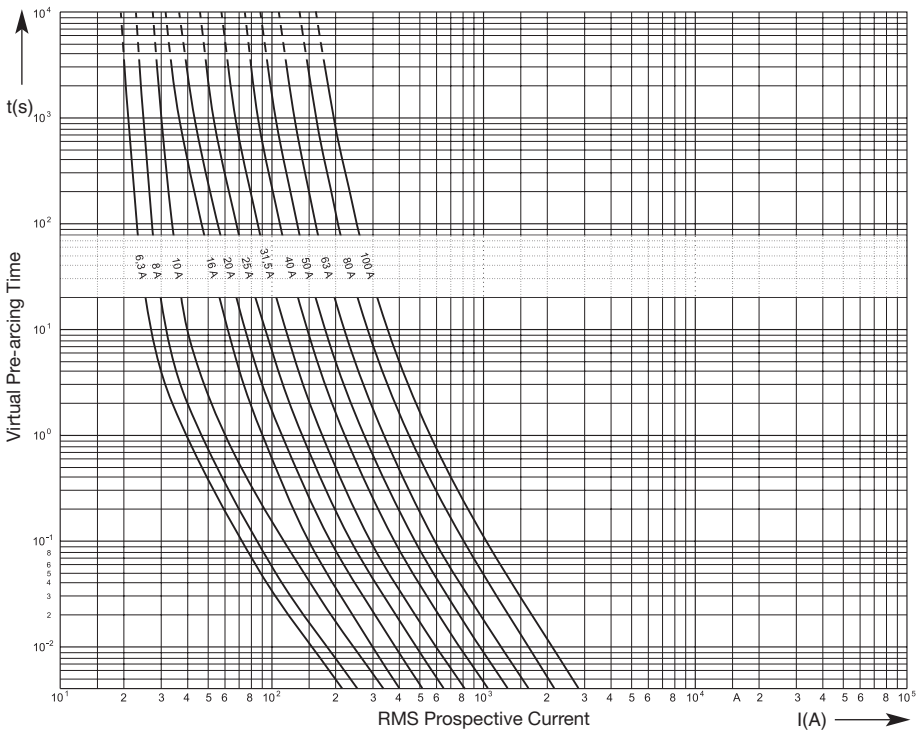

Cut Off Current Diagram 6,3A - 100A General Purpose

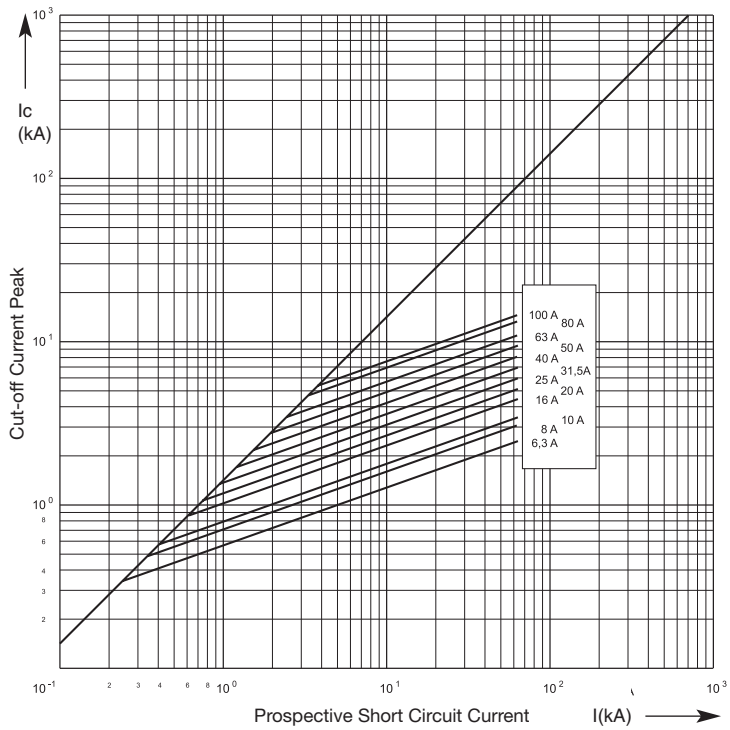

HV fuse link
Vertical Cross Section

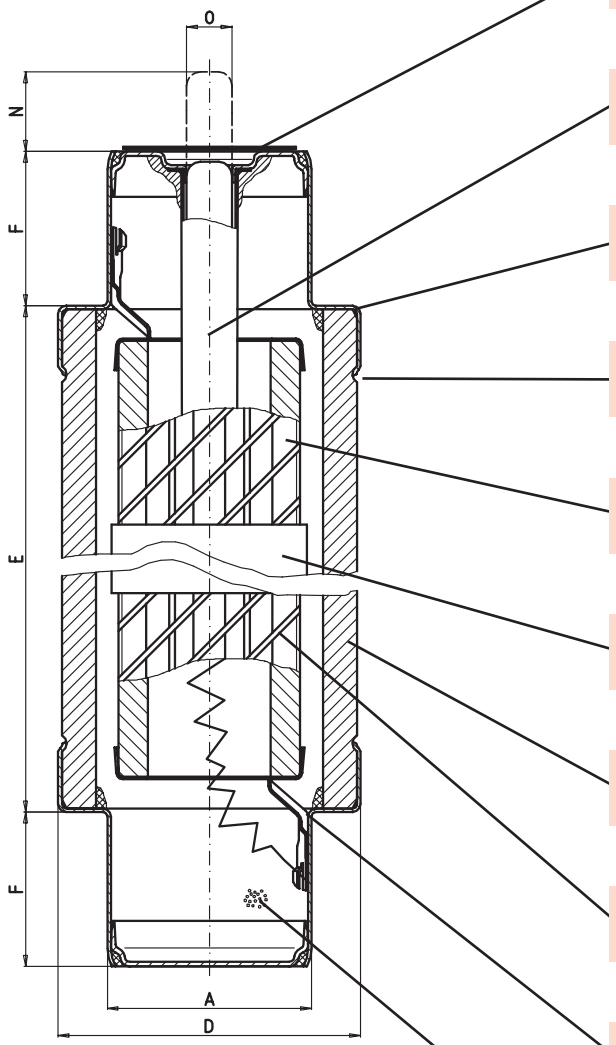

- Weather resistant label
- **Integrated temperature limiter**
- Sealing compound
- Shaped cap
- Melting element support
- Thermal Zone (at General Purpose fuse only)
- Ceramic insulating tube
- Silver melting element welded to contact strap
- Connecting straps pastened to contactcap by resistance welding
- Quarzsand

Force / distance diagram

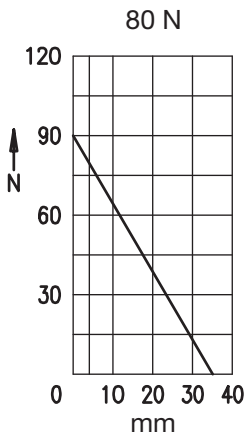

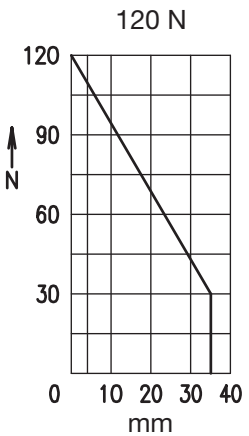

Recommendation for the protection of main transformer
with HV-Fuse links DIN Standard

Protection using LV-Fuse links* operating class gG / gL on the low voltage side — TYPE A

Transformer rated capacity (kVA)	Line Voltage (kV) 6 - 7.2	10 - 12	20 - 24	30 - 36	LV fuse gG / gL (A)
	Rated current of the HV-fuse (A)				
50	10 - 16	10	6.3	4 - 6.3	63
100	20 - 31.5	16 - 20	10	6.3 - 10	125
125	25 - 40	16 - 25	10 - 16	10	160
160	31.5 - 50	20 - 31.5	16 - 20	10 - 16	200
200	40 - 63	25 - 40	16 - 20	16	250
250	50 - 80	31.5 - 50	20 - 25	16 - 20	315
315	63 - 100	40 - 50	20 - 25	20 - 25	400
400	80 - 100	50 - 80	25 - 40	20 - 25	500
500	100 - 125	63 - 80	31.5 - 50	25 - 31.5	630
630	125 - 160	80 - 125	40 - 63	31.5 - 40	800
800	160	100 - 125	63	40 - 50	1000
1000	160 - 200	125 - 160	63 - 80	40 - 50	1250
1250	250	160	80	50	–
1600	2 x 160	200	100	63	–
2000	2 x 200	250	125	80	–

*** Use of the recommended HV-Fuse links in connection with LV-fuse links of other manufacturer must be checked before installation**

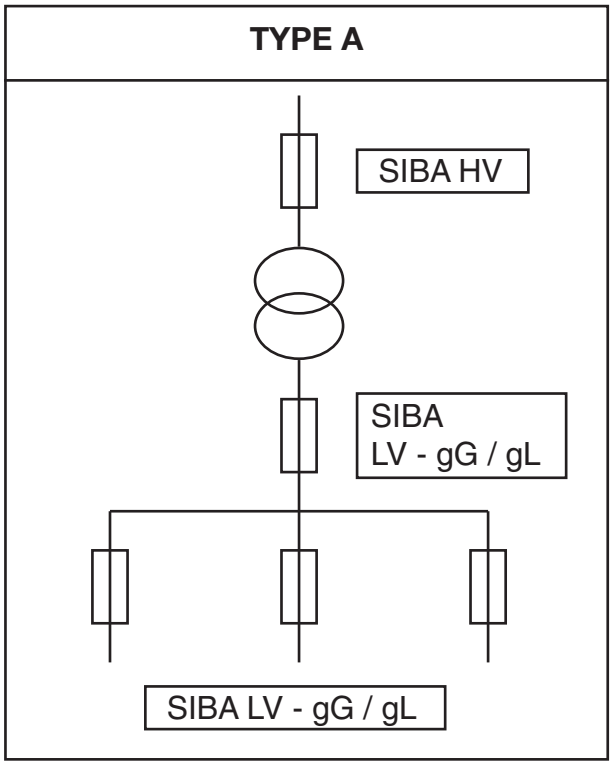

Recommendation for the protection of main transformer
with HV-Fuse links DIN Standard

Protection without using a common LV-Fuse link on the low voltage side; the individual cable exits are protected with a LV-Fuse link operating class gL / gG — TYPE B

Transformer rated capacity (kVA)	Line Voltage (kV) 6 - 7.2	10 - 12	15 - 17.5	20 - 24	30 - 36
	Rated current of the HV-fuse (A)				
50	10 - 16	10	6.3 - 10	6.3	4 - 6.3
100	16 - 31.5	16 - 25	16	10	6.3 - 10
125	20 - 40	16 - 31.5	20	10 - 16	6.3 - 10
160	31.5 - 50	20 - 31.5	20 - 25	16 - 20	10 - 16
200	31.5 - 63	25 - 40	20 - 31.5	16 - 20	10 - 16
250	40 - 80	25 - 40	25 - 31.5	16 - 25	10 - 20
315	50 - 100	31.5 - 50	31.5	16 - 25	16 - 25
400	63 - 100	40 - 63	31.5 - 50	20 - 40	16 - 25
500	80 - 125	50 - 80	31.5 - 63	25 - 50	20 - 31.5
630	100 - 160	63 - 100	40 - 80	31.5 - 63	20 - 40
800	125 - 160	80 - 125	63 - 100	40 - 63	25 - 50
1000	160 - 200	100 - 160	63 - 100	50 - 80	31.5 - 50
1250	250	160	100	80	50
1600	2 x 160	200	125	100	63
2000	2 x 200	250	160	125	80

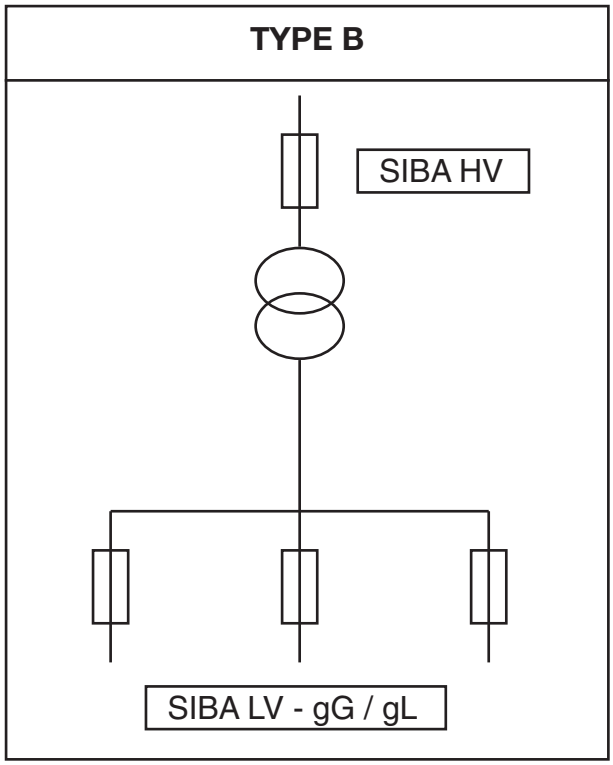

Application recommendation for protection of capacitors
with HV-Fuse links DIN Standard

Assignment of rated currents of HV-Fuse links to DIN Standard to Capacitor rated capacities

Capacitor rated capacity (kVAr)	Line Voltage (kV) 6 - 7.2	10 - 12	20 - 24
	Rated current of the HV-fuse (A)		
50	10	6.3	6.3
100	20	10	6.3
200	40	20	10
250	50	25	16
300	63	31.5	16
400	80	40	20
500	100	50	25
750	160	80	40
1000	200	100	50
1250	250	125	63
1600	315	160	80
2000	315	200	100

To control the occuring voltage during switch off Fuse link should be chosen from the next higher voltage range. e.g. 10 kV Capacitor with 20 kV Fuse links. (See also IEC 549, Chapter II, § 3.2)

HV Fuse-bases for indoor application

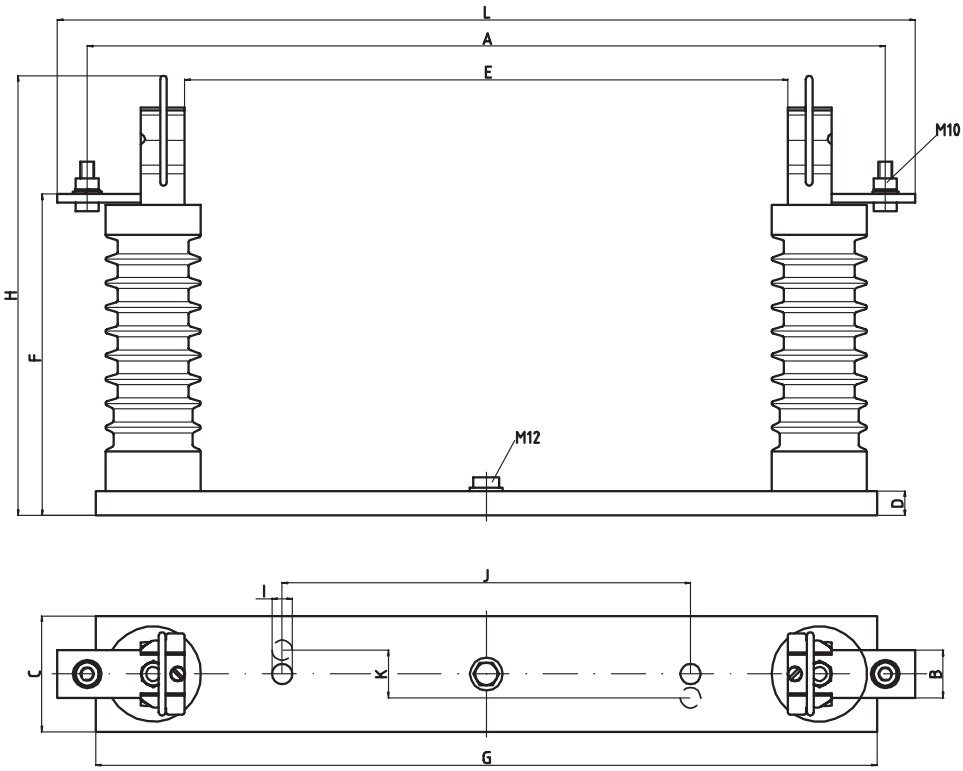

Rated Voltage **7.2 kV** Part No. **31 001 02**		Rated Voltage **12 kV** Part No. **31 003 02**		Rated Voltage **24 kV** Part No. **31 005 02**		Rated Voltage **36 kV** Part No. **31 007 02**		Rated Voltage **24 kV** Part No. **31 221 01***	
A	13.78" (350 mm)	A	17.72" (450 mm)	A	23.62" (600 mm)	A	27.36" (695 mm)	A	17.72" (450 mm)
B	1.38" (35 mm)	B	1.38" (35 mm)	B	1.38" (35 mm)	B	1.38" (35 mm)	B	1.38" (35 mm)
C	3.35" (85 mm)	C	3.35" (85 mm)	C	3.35" (85 mm)	C	3.35" (85 mm)	C	3.35" (85 mm)
D	0.70" (18 mm)	D	0.70" (18 mm)	D	0.70" (18 mm)	D	0.70" (18 mm)	D	0.70" (18 mm)
E	7.60" (193 mm)	E	11.54" (293 mm)	E	17.44" (443 mm)	E	21.18" (538 mm)	E	11.54" (293 mm)
F	6.14" (156 mm)	F	6.14" (156 mm)	F	9.30" (236 mm)	F	12.83" (326 mm)	F	9.30" (236 mm)
G	12.20" (310 mm)	G	16.14" (410 mm)	G	22.60" (574 mm)	G	26.60" (676 mm)	G	16.14" (410 mm)
H	9.53" (242 mm)	H	9.53" (242 mm)	H	12.68" (322 mm)	H	16.22" (412 mm)	H	12.68" (322 mm)
I	0.60" (15 mm)	I	0.60" (15 mm)	I	0.60" (15 mm)	I	0.60" (15 mm)	I	0.60" (15 mm)
J	2.17" (55 mm)	J	7.10" (180 mm)	J	11.80" (300 mm)	J	14.96" (380 mm)	J	7.10" (180 mm)
K	1.38" (35 mm)								
L	14.96" (380 mm)	L	18.90" (480 mm)	L	24.80" (630 mm)	L	28.54" (725 mm)	L	18.90" (480 mm)

* Reduced Length for 24 kV Fuse links, E= 292 mm

HV Fuse-bases for outdoor application

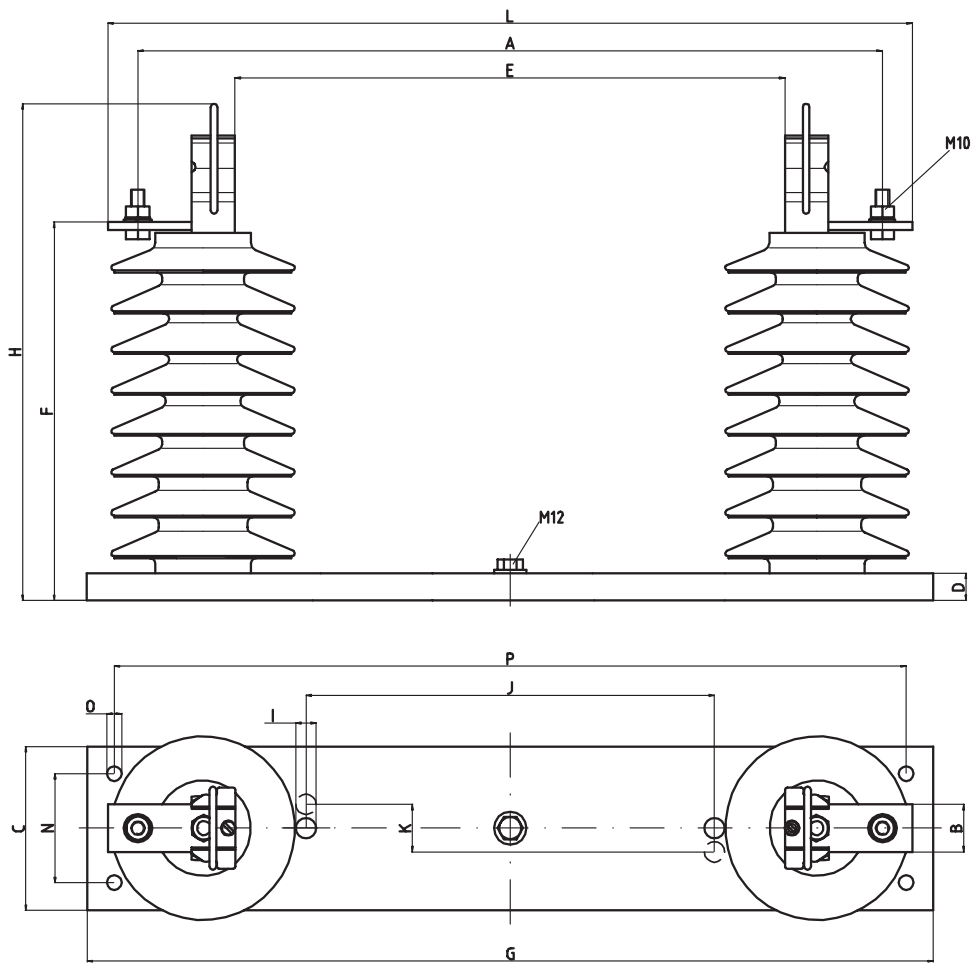

Rated Voltage **7.2 kV** Part No. **31 002 01**		Rated Voltage **12 kV** Part No. **31 004 01**		Rated Voltage **24 kV** Part No. **31 006 01**		Rated Voltage **36 kV** Part No. **31 008 01**	
A	13.78 ” (350 mm)	A	17.72 ” (450 mm)	A	23.62 ” (600 mm)	A	27.36 ” (695 mm)
B	1.38 ” (35 mm)	B	1.38 ” (35 mm)	B	1.38 ” (35 mm)	B	1.38 ” (35 mm)
C	4.72 ” (120 mm)	C	4.72 ” (120 mm)	C	4.72 ” (120 mm)	C	4.72 ” (120 mm)
D	0.80 ” (20 mm)	D	0.80 ” (20 mm)	D	0.80 ” (20 mm)	D	0.80 ” (20 mm)
E	7.60 ” (193 mm)	E	11.54 ” (293 mm)	E	17.44 ” (443 mm)	E	21.18 ” (538 mm)
F	9.33 ” (237 mm)	F	9.33 ” (237 mm)	F	12.09 ” (307 mm)	F	15.24 ” (387 mm)
G	16.14 ” (410 mm)	G	20.08 ” (510 mm)	G	25.98 ” (660 mm)	G	30.91 ” (785 mm)
H	12.80 ” (325 mm)	H	12.80 ” (325 mm)	H	15.55 ” (395 mm)	H	18.70 ” (475 mm)
I	0.60 ” (15 mm)	I	0.60 ” (15 mm)	I	0.60 ” (15 mm)	I	0.60 ” (15 mm)
J	2.17 ” (55 mm)	J	7.10 ” (180 mm)	J	11.81 ” (300 mm)	J	14.95 ” (380 mm)
K	1.38 ” (35 mm)						
L	14.96 ” (380 mm)	L	18.90 ” (480 mm)	L	24.80 ” (630 mm)	L	28.54 ” (725 mm)
N	3.15 ” (80 mm)	N	3.15 ” (80 mm)	N	3.15 ” (80 mm)	N	3.15 ” (80 mm)
O	0.43 ” (11 mm)	O	0.43 ” (11 mm)	O	0.43 ” (11 mm)	O	0.43 ” (11 mm)
P	14.57 ” (370 mm)	P	18.50 ” (470 mm)	P	24.40 ” (620 mm)	P	29.33 ” (620 mm)

Microswitch	Part No.
L= 660 mm	31 001 10
L= 900 mm	31 001 14

Microswitch
Part No. 28 001 04
250 V / 6 A
1 change over contact

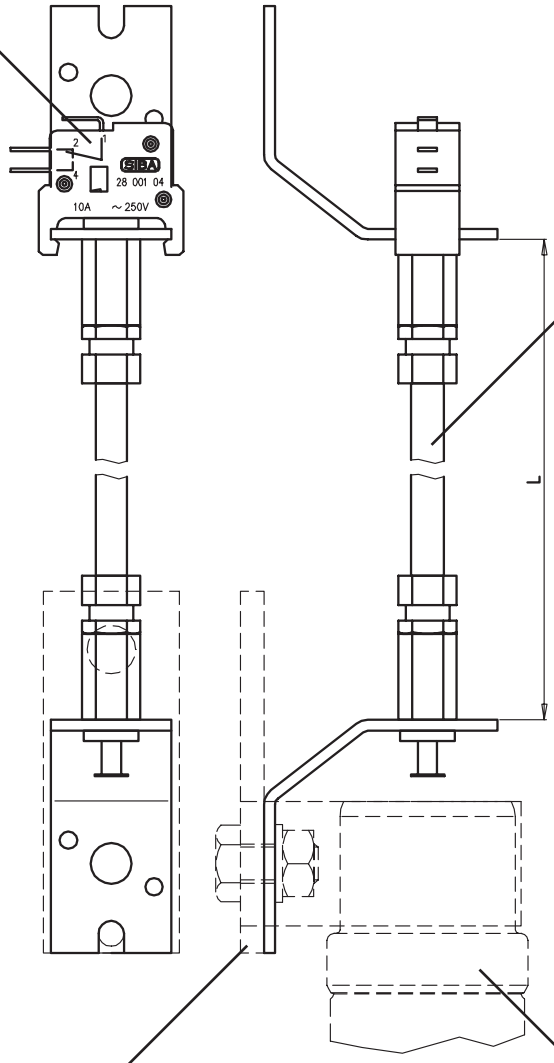

Flexible Cable

Connection bar
of the
spring clip contact
Part No. 34 002 01

HV-Fuse cap

Fuse Clip

HV-Spring clip contact with connection bar

Part No.
34 002 01

A	**1.38 ”**	(35 mm)
B	**1.26 ”**	(32 mm)
F	**0.24 ”**	(156 mm)
G	**2.80 ”**	(71.5 mm)
H	**3.74 ”**	(95 mm)
L	**3.66 ”**	(93 mm)
M	**M 10**	

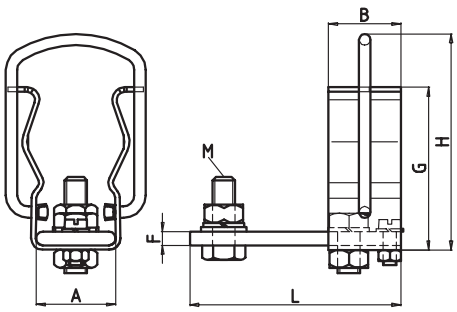

Spacer

Part No.
31 002 01.3

A	**1.26 ”**	(32 mm)
B	**1.38 ”**	(35 mm)
C	**0.24 ”**	(6 mm)
D	**0.40 ”**	(18 mm)
E	**0.20 ”**	(5 mm)
F	**0.70 ”**	(18 mm)
G	**0.26 ”**	(6.5 mm)

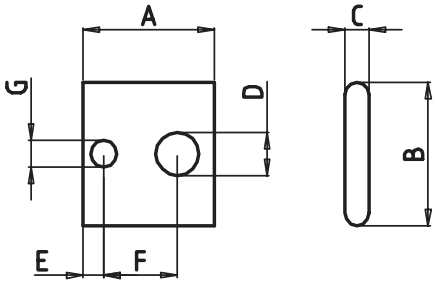

24 kV Extension adapter for high voltage Fuses 12kV

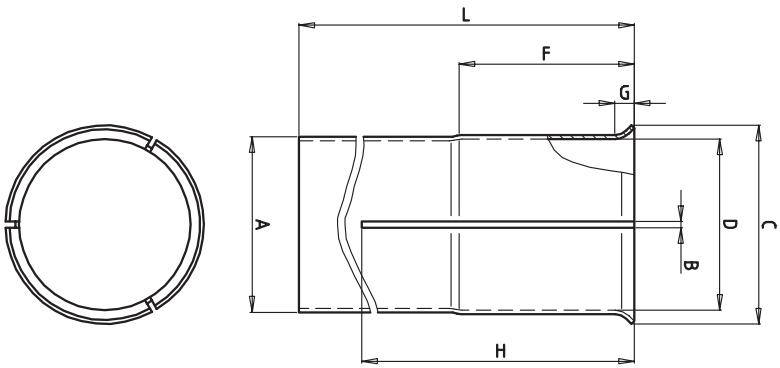

Part No. 34 006 01		
A	1.77 ”	(45 mm)
B	0.06 ”	(1.5 mm)
C	2.00 ”	(51 mm)
D	1.73 ”	(44 mm)
F	1.77 ”	(45 mm)
G	0.20 ”	(5 mm)
H	2.76 ”	(70 mm)
L	7.28 ”	(185 mm)

HV-Fuse with 24 kV Extension adapter (Part No. 34 006 01)

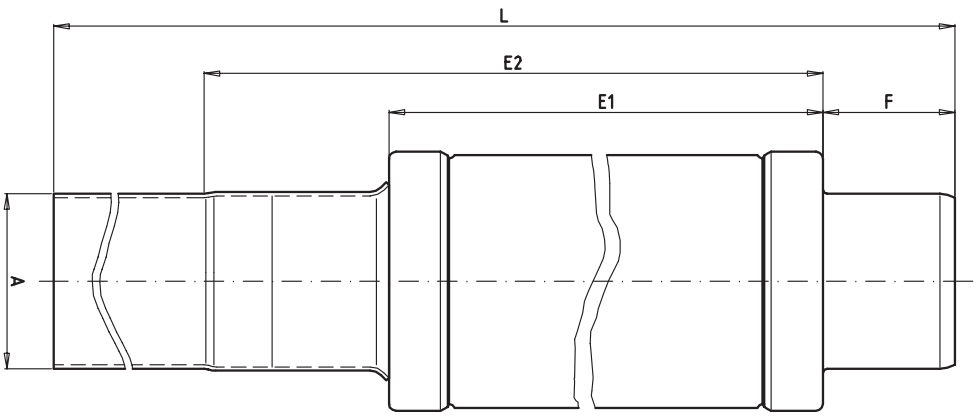

A	1.77 ”	(45 mm)
E1	11.50 ”	(292 mm)
E2	17.40 ”	(442 mm)
F	1.30 ”	(33 mm)
L	20.00 ”	(508 mm)

Test-Fuse

with time delayed release

for testing the release mechanism in enclosed medium voltage switchgear

Part No. 33 010 03		
A	1.77 ”	(45 mm)
D	2.76 ”	(70 mm)
E	7.56 ”	(192 mm)
F	1.34 ”	(34 mm)
G	0.30 ”	(8 mm)
H	1.06 ”	(27 mm)
L	10.24 ”	(260 mm)

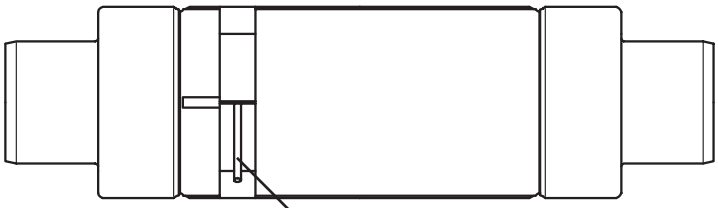

Clamp lever
for timer

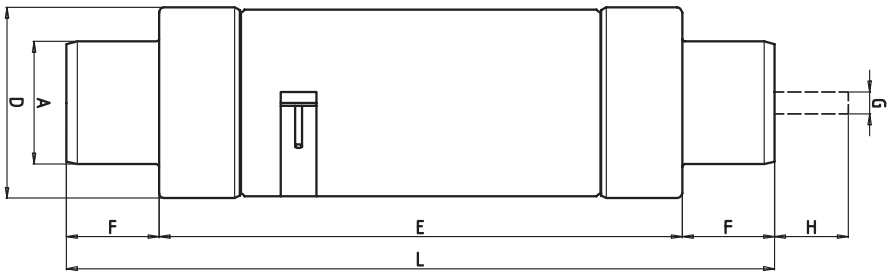

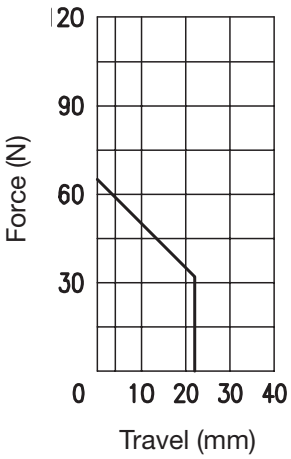

To change E an adaptor is available

from 192 mm to 292 mm **Part No.** 34 004 02

from 192 mm to 442 mm **Part No.** 34 006 02

HV-Contact clip | Rated Current 200 A | for indoor and outdoor application

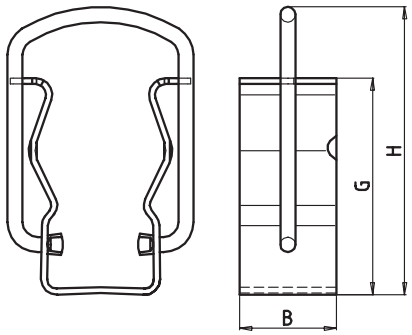

Part No. 31 003 02.20		
B	1.26 ”	(32 mm)
G	2.80 ”	(71.5 mm)
H	3.74 ”	(95 mm)

HV-Contact clip | Rated Current > 200 A | for indoor and outdoor application

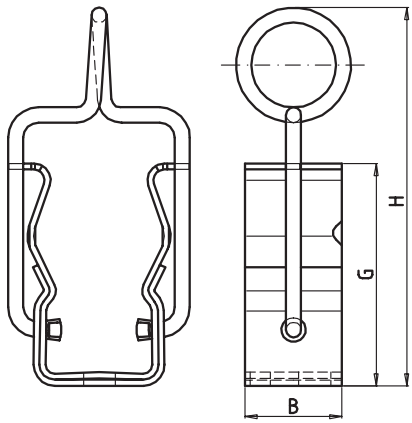

Part No. 34 001 01.20		
B	1.26 ”	(32 mm)
G	2.90 ”	(73.5 mm)
H	4.92 ”	(125 mm)

Storage holder
for HV- and LV-Fuses

Rated Voltage kV	Part No.	HV-Fuses (pieces)	LV-Fuses (pieces)	L		B		T		Weight (kg/1)
				inch	mm	inch	mm	inch	mm	
12	33 004 01	3	6	11.96	304	16.06	408	4.13	105	1.0
24	33 006 01	3	6	17.87	454	16.06	408	4.13	105	1.4
36	33 008 01	3	6	21.65	550	16.06	408	4.13	105	1.9

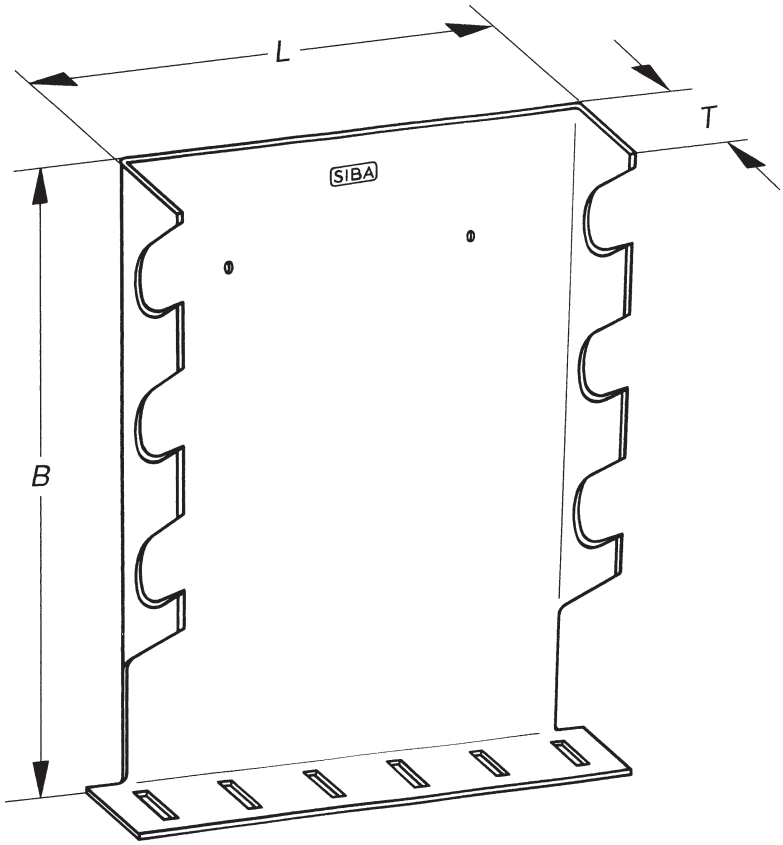

MEDIUM VOLTAGE FUSES

BRITISH STANDARD

FOR AIR & OIL INSULATED SWITCHGEARS

Medium-Voltage fuses for installation in oil or air insulated switchgear according British Standard

Introduction

Medium voltage fuses according British Standard are back-up fuses for the protection of substations up to 24 kV.

The fuse links of this section comply with the following national and international standards:

- IEC 60282-1
- BS 2692
- ESI 12-8

Design and construction of these fuses follow the well-proven concept of all SIBA high-voltage fuse-links. For pressure resistant encapsulation, high grade ceramic is used. Contact material consists of silver plated high conductivity copper. The pure silver melting elements are provided with appropriate notches to ensure small time/current-curve tolerances and low let-through currents. The arc quenching quartz sand is subject to special survey criteria regarding its composition, grain size and humidity content.

Fuse-links for oil insulated switchgear

These fuse links comply with the requirements for tightness under oil as well as special mechanical properties for use in oil filled switchgears. The fuse-links are fitted with a striker pin and are very useful in Fuse/Switch-Combinations which comply with the requirements of IEC 60420.

For installations of fuse-links in oil filled transformers please refer to section HHO of this catalog.

Fuse links for air insulated switchgear

These fuse links are fitted with a striker pin and comply with the requirements of IEC 60420.

Fuse links of this design are available in different shape and dimensions, e.g.:

- with cylindrical contact caps for fitting in spring clip contacts
- with different bolting contact armatures.

Dimensional drawings in this catalog show some of the available types. Alternative fixing arrangements are available upon request.

SIBA FUSES

MEDIUM VOLTAGE FUSES
BRITISH STANDARD

FOR AIR & OIL INSULATED SWITCHGEARS

Selection Guide

Type (old BS-Code)	Rated Voltage AC kV	Length mm	Class	Part No.	Selector Guide Page	Techn. Data Page
FO 1	7.2	254	Back up / Oiltight	30 132 36	HHB 3	HHB 19
FO 2	7.2	359	Back up / Oiltight	30 234 36	HHB 3	HHB 19
FO 1	12	254	Back up / Oiltight	30 144 36	HHB 4	HHB 20
FO 2	12	359	Back up / Oiltight	30 237 36	HHB 5	HHB 20
–	15.5	254	Back up / Oiltight	30 293 36	HHB 6	HHB 21
FO 1	15.5	359	Back up / Oiltight	30 294 36	HHB 6	HHB 21
–	24	359	Back up / Oiltight	30 156 36	HHB 7	HHB 22
–	7.2	254	Back up / in Air	30 241 36	HHB 8	HHB 23
–	7.2	359	Back up / in Air	30 242 36	HHB 9	HHB 23
FA 1	7.2	254	Back up / in Air	30 135 36	HHB 8	HHB 23
FA 2	7.2	359	Back up / in Air	30 137 36	HHB 9	HHB 23
–	12	254	Back up / in Air	30 141 36	HHB 10	HHB 24
–	12	359	Back up / in Air	30 243 36	HHB 10	HHB 24
–	12	254	Back up / in Air	30 145 36	HHB 11	HHB 25
–	12	359	Back up / in Air	30 147 36	HHB 11	HHB 25
FA 3	24	565	Back up / in Air	30 244 36	HHB 12	HHB 26
FA 4	24	565	Back up / in Air	30 161 36	HHB 12	HHB 26
TA 3	7.2		Back up / in Air	30 246 36	HHB 13	HHB 27
TA 3	7.2		Back up / in Air	30 249 36	HHB 14	HHB 27
TA 3	12		Back up / in Air	30 247 36	HHB 15	HHB 28
TA 3	12		Back up / in Air	30 250 36	HHB 16	HHB 28
TA 3	24		Back up / in Air	30 248 36	HHB 17	HHB 29
TA 2	24		Back up / in Air	30 251 36	HHB 18	HHB 29

MEDIUM VOLTAGE FUSES

BRITISH STANDARD

FOR AIR & OIL INSULATED SWITCHGEARS

Type FO 1	Rated voltage	Class	Standard
L= 254 mm	**AC 7.2 kV**	**Back up / Oiltight**	**BS 2692-1 · IEC 60282-1 · ESI 12-8**

Rated current	Part No.	D= Diameter inch	D= Diameter mm	Breaking current kA	Weight (kg/1)	Pack
6.3 A	30 132 36	2.5	63.5	40	1.8	1
10 A	30 132 36	2.5	63.5	40	1.8	1
16 A	30 132 36	2.5	63.5	40	1.8	1
20 A	30 132 36	2.5	63.5	40	1.8	1
25 A	30 132 36	2.5	63.5	40	1.8	1
31.5 A	30 132 36	2.5	63.5	40	1.8	1
40 A	30 132 36	2.5	63.5	40	1.8	1
50 A	30 132 36	2.5	63.5	40	1.8	1
63 A	30 132 36	2.5	63.5	40	1.8	1
80 A	30 132 36	2.5	63.5	40	1.8	1
100 A	30 132 36	2.5	63.5	40	1.8	1
112 A	30 132 36	2.5	63.5	40	1.8	1

Type FO 2	Rated voltage	Class	Standard
L= 359 mm	**AC 7.2 kV**	**Back up / Oiltight**	**BS 2692-1 · IEC 60282-1 · ESI 12-8**

Rated current	Part No.	D= Diameter inch	D= Diameter mm	Breaking current kA	Weight (kg/1)	Pack
125 A	30 234 36	2.5	63.5	40	2.5	1
140 A	30 234 36	2.5	63.5	40	2.5	1

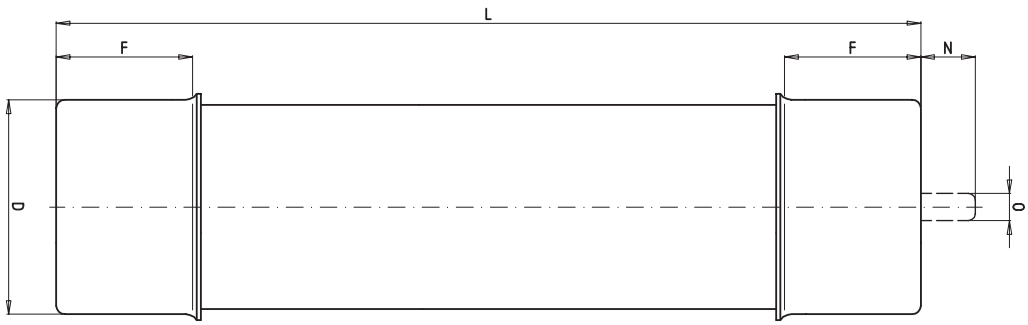

F	1.57 ”	(40 mm)
N	0.50 ”	(13 mm)
O	0.31 ”	(8 mm)

SIBA FUSES

MEDIUM VOLTAGE FUSES

BRITISH STANDARD

FOR AIR & OIL INSULATED SWITCHGEARS

Type FO 1	Rated voltage	Class	Standard
L= 254 mm	**AC 12 kV**	**Back up / Oiltight**	**BS 2692 · IEC 60282-1 · ESI 12-8**

Rated current	Part No.	D= Diameter inch	D= Diameter mm	Breaking current kA	Weight (kg/1)	Pack
6.3 A	30 144 36	2.5	63.5	40	1.8	1
10 A	30 144 36	2.5	63.5	40	1.8	1
16 A	30 144 36	2.5	63.5	40	1.8	1
20 A	30 144 36	2.5	63.5	40	1.8	1
25 A	30 144 36	2.5	63.5	40	1.8	1
31.5 A	30 144 36	2.5	63.5	40	1.8	1
40 A	30 144 36	2.5	63.5	40	1.8	1
50 A	30 144 36	2.5	63.5	40	1.8	1
63 A	30 144 36	2.5	63.5	40	1.8	1
80 A	30 144 36	2.5	63.5	40	1.8	1
100 A	30 144 36	2.5	63.5	40	1.8	1

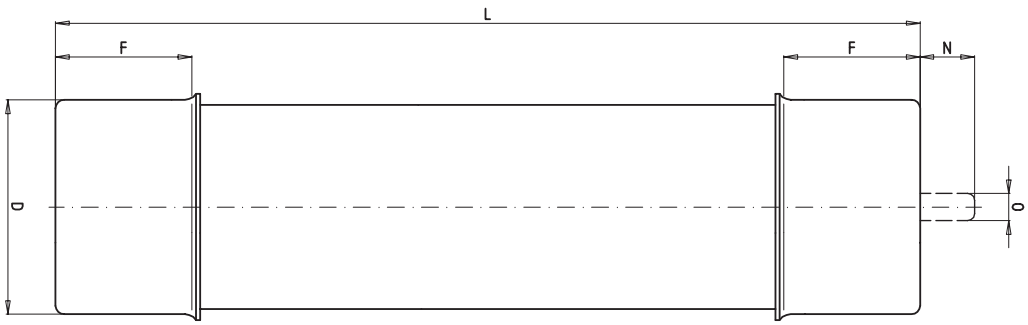

F	**1.57 ”**	(40 mm)
N	**0.50 ”**	(13 mm)
O	**0.31 ”**	(8 mm)

SIBA FUSES

HHB

MEDIUM VOLTAGE FUSES
BRITISH STANDARD

FOR AIR & OIL INSULATED SWITCHGEARS

Type FO 2	Rated voltage	Class	Standard
L= 359 mm	**AC 12 kV**	**Back up / Oiltight**	**BS 2692 · IEC 60282-1 · ESI 12-8**

Rated current	Part No.	D= Diameter inch	D= Diameter mm	Breaking current kA	Weight (kg/1)	Pack
6.3 A	30 237 36	2.5	63.5	40	2.5	1
10 A	30 237 36	2.5	63.5	40	2.5	1
16 A	30 237 36	2.5	63.5	40	2.5	1
20 A	30 237 36	2.5	63.5	40	2.5	1
25 A	30 237 36	2.5	63.5	40	2.5	1
31.5 A	30 237 36	2.5	63.5	40	2.5	1
40 A	30 237 36	2.5	63.5	40	2.5	1
50 A	30 237 36	2.5	63.5	40	2.5	1
63 A	30 237 36	2.5	63.5	40	2.5	1
80 A	30 237 36	2.5	63.5	40	2.5	1
100 A	30 237 36	2.5	63.5	40	2.5	1
125 A	30 237 36	2.5	63.5	40	2.5	1
145 A	30 237 36	2.5	63.5	40	2.5	1

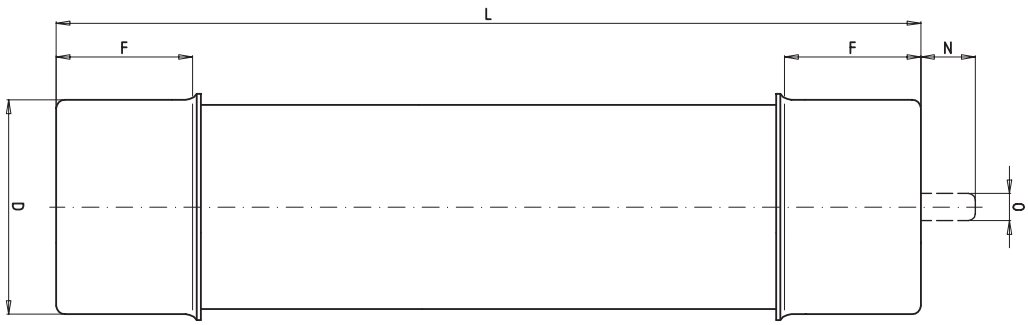

F	**1.57 ”**	(40 mm)
N	**0.50 ”**	(13 mm)
O	**0.31 ”**	(8 mm)

SIBA FUSES

MEDIUM VOLTAGE FUSES

BRITISH STANDARD

FOR AIR & OIL INSULATED SWITCHGEARS

Type FO 1	Rated voltage	Class	Standard
L= 254 mm	**AC 15.5 kV**	**Back up / Oiltight**	**BS 2692 · IEC 60282-1 · ESI 12-8**

Rated current	Part No.	D= Diameter inch	D= Diameter mm	Breaking current kA	Weight (kg/1)	Pack
6.3 A	30 293 36	2.5	63.5	40	1.8	1
10 A	30 293 36	2.5	63.5	40	1.8	1
16 A	30 293 36	2.5	63.5	40	1.8	1
20 A	30 293 36	2.5	63.5	40	1.8	1
25 A	30 293 36	2.5	63.5	40	1.8	1
31.5 A	30 293 36	2.5	63.5	40	1.8	1
40 A	30 293 36	2.5	63.5	40	1.8	1
50 A	30 293 36	2.5	63.5	40	1.8	1
63 A	30 293 36	2.5	63.5	40	1.8	1

Type FO 2	Rated voltage	Class	Standard
L= 359 mm	**AC 15.5 kV**	**Back up / Oiltight**	**BS 2692 · IEC 60282-1 · ESI 12-8**

Rated current	Part No.	D= Diameter inch	D= Diameter mm	Breaking current kA	Weight (kg/1)	Pack
6.3 A	30 294 36	2.5	63.5	40	2.5	1
10 A	30 294 36	2.5	63.5	40	2.5	1
16 A	30 294 36	2.5	63.5	40	2.5	1
20 A	30 294 36	2.5	63.5	40	2.5	1
25 A	30 294 36	2.5	63.5	40	2.5	1
31.5 A	30 294 36	2.5	63.5	40	2.5	1
40 A	30 294 36	2.5	63.5	40	2.5	1
50 A	30 294 36	2.5	63.5	40	2.5	1
63 A	30 294 36	2.5	63.5	40	2.5	1
80 A	30 294 36	2.5	63.5	40	2.5	1

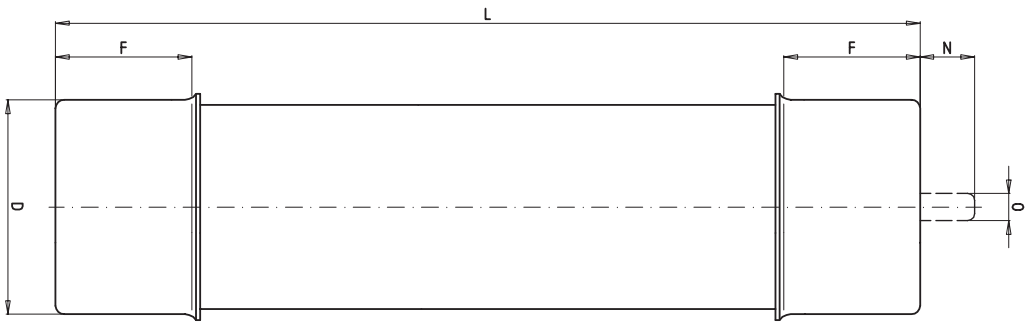

F	1.57 ”	(40 mm)
N	0.50 ”	(13 mm)
O	0.31 ”	(8 mm)

MEDIUM VOLTAGE FUSES

BRITISH STANDARD

FOR AIR & OIL INSULATED SWITCHGEARS

Type FO 2	Rated voltage	Class	Standard
L= 359 mm	**AC 24 kV**	**Back up / Oiltight**	**BS 2692 · IEC 60282-1 · ESI 12-8**

Rated current	Part No.	D= Diameter inch	D= Diameter mm	Breaking current kA	Weight (kg/1)	Pack
6.3 A	30 156 36	2.5	63.5	40	2.5	1
10 A	30 156 36	2.5	63.5	40	2.5	1
16 A	30 156 36	2.5	63.5	40	2.5	1
20 A	30 156 36	2.5	63.5	40	2.5	1
25 A	30 156 36	2.5	63.5	40	2.5	1
31.5 A	30 156 36	2.5	63.5	40	2.5	1
40 A	30 156 36	2.5	63.5	40	2.5	1
50 A	30 156 36	2.5	63.5	40	2.5	1

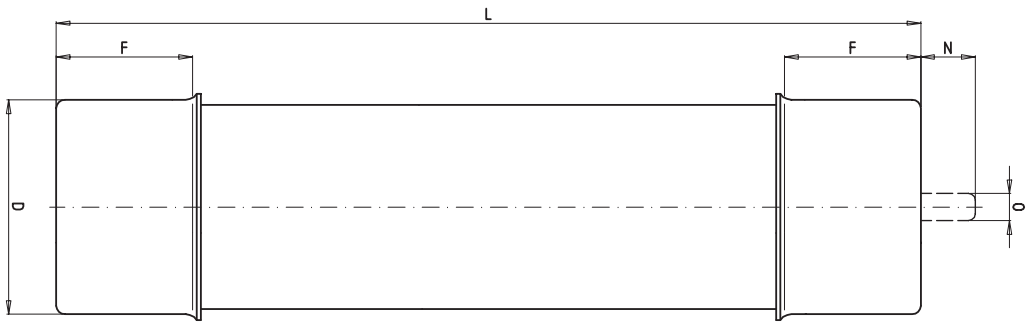

F	**1.57 ”**	(40 mm)
N	**0.50 ”**	(13 mm)
O	**0.31 ”**	(8 mm)

HHB

SIBA FUSES

MEDIUM VOLTAGE FUSES

BRITISH STANDARD

FOR AIR INSULATED SWITCHGEARS

Length	Rated voltage	Class	Standard
L= 254 mm	**AC 7.2 kV**	**Back up / in Air**	**BS 2692 · IEC 60282-1 · ESI 12-8**

Rated current	Part No.	D= Diameter inch	D= Diameter mm	Breaking current kA	Weight (kg/1)	Pack
6.3 A	30 241 36	2.00	51	40	2.5	1
10 A	30 241 36	2.00	51	40	2.5	1
16 A	30 241 36	2.00	51	40	2.5	1
20 A	30 241 36	2.00	51	40	2.5	1
25 A	30 241 36	2.00	51	40	2.5	1
31.5 A	30 241 36	2.00	51	40	2.5	1
40 A	30 241 36	2.00	51	40	2.5	1
50 A	30 241 36	2.00	51	40	2.5	1
63 A	30 241 36	2.00	51	40	2.5	1
80 A	30 135 36	3.00	76	40	2.5	1
100 A	30 135 36	3.00	76	40	2.5	1

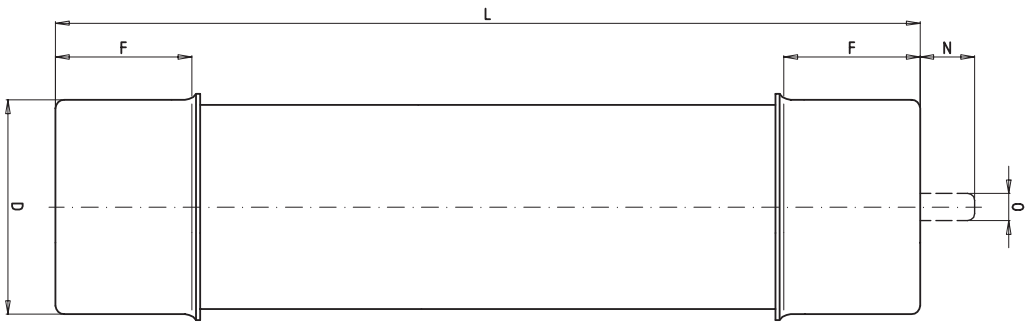

F	1.57 ”	(40 mm)
N	0.50 ”	(13 mm)
O	0.31 ”	(8 mm)

SIBA FUSES

HHB

MEDIUM VOLTAGE FUSES
BRITISH STANDARD

FOR AIR INSULATED SWITCHGEARS

Length	Rated voltage	Class	Standard
L= 359 mm	**AC 7.2 kV**	**Back up**	**BS 2692 · IEC 60282-1 · ESI 12-8**

Rated current	Part No.	D= Diameter inch	D= Diameter mm	Breaking current kA	Weight (kg/1)	Pack
6.3 A	30 242 36	2.00	51	40	3.6	1
10 A	30 242 36	2.00	51	40	3.6	1
16 A	30 242 36	2.00	51	40	3.6	1
20 A	30 242 36	2.00	51	40	3.6	1
25 A	30 242 36	2.00	51	40	3.6	1
31.5 A	30 242 36	2.00	51	40	3.6	1
40 A	30 242 36	2.00	51	40	3.6	1
50 A	30 242 36	2.00	51	40	3.6	1
63 A	30 242 36	2.00	51	40	3.6	1
80 A	30 242 36	3.00	51	40	3.6	1
100 A	30 137 36	3.00	76	40	3.6	1
125 A	30 137 36	3.00	76	40	3.6	1
140 A	30 137 36	3.00	76	40	3.6	1
160 A	30 137 36	3.00	76	40	3.6	1

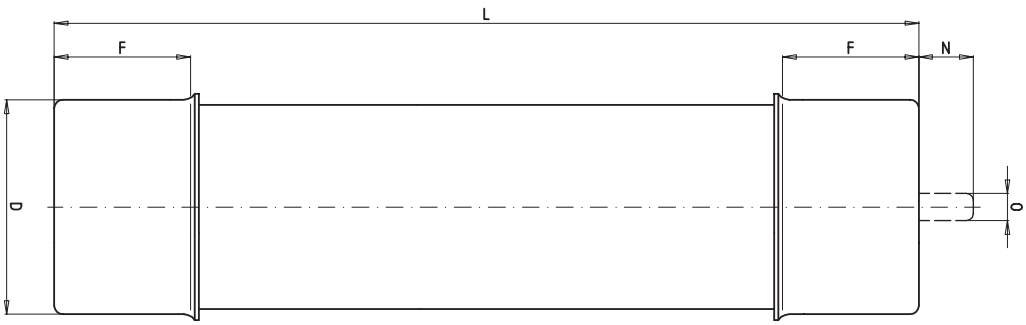

F	**1.57 ”**	(40 mm)
N	**0.50 ”**	(13 mm)
O	**0.31 ”**	(8 mm)

SIBA FUSES

MEDIUM VOLTAGE FUSES

BRITISH STANDARD

FOR AIR INSULATED SWITCHGEARS

Length	Rated voltage	Class	Standard
L= 254 mm	**AC 12 kV**	**Back up / in Air**	**BS 2692 · IEC 60282-1 · ESI 12-8**

Rated current	Part No.	D= Diameter inch	D= Diameter mm	Breaking current kA	Weight (kg/1)	Pack
6.3 A	30 141 36	2.00	51	40	2.5	1
10 A	30 141 36	2.00	51	40	2.5	1
16 A	30 141 36	2.00	51	40	2.5	1
20 A	30 141 36	2.00	51	40	2.5	1
25 A	30 141 36	2.00	51	40	2.5	1
31.5 A	30 141 36	2.00	51	40	2.5	1
40 A	30 141 36	2.00	51	40	2.5	1
50 A	30 141 36	2.00	51	40	2.5	1

Length	Rated voltage	Class	Standard
L= 359 mm	**AC 12 kV**	**Back up / in Air**	**BS 2692 · IEC 60282-1 · ESI 12-8**

Rated current	Part No.	D= Diameter inch	D= Diameter mm	Breaking current kA	Weight (kg/1)	Pack
6.3 A	30 243 36	2.00	51	40	3.6	1
10 A	30 243 36	2.00	51	40	3.6	1
16 A	30 243 36	2.00	51	40	3.6	1
20 A	30 243 36	2.00	51	40	3.6	1
25 A	30 243 36	2.00	51	40	3.6	1
31.5 A	30 243 36	2.00	51	40	3.6	1
40 A	30 243 36	2.00	51	40	3.6	1
50 A	30 243 36	2.00	51	40	3.6	1

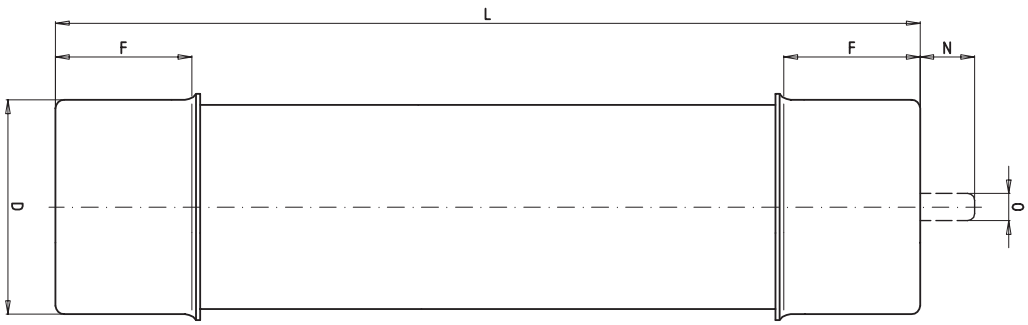

F	1.57 ”	(40 mm)
N	0.50 ”	(13 mm)
O	0.31 ”	(8 mm)

MEDIUM VOLTAGE FUSES

BRITISH STANDARD

FOR AIR INSULATED SWITCHGEARS

Length	Rated voltage	Class	Standard
L= 254 mm	**AC 12 kV**	**Back up**	**BS 2692 · IEC 60282-1 · ESI 12-8**

Rated current	Part No.	D= Diameter inch	D= Diameter mm	Breaking current kA	Weight (kg/1)	Pack
40 A	30 145 36	3.00	76	40	2.5	1
50 A	30 145 36	3.00	76	40	2.5	1
63 A	30 145 36	3.00	76	40	2.5	1

Length	Rated voltage	Class	Standard
L= 359 mm	**AC 12 kV**	**Back up**	**BS 2692 · IEC 60282-1 · ESI 12-8**

Rated current	Part No.	D= Diameter inch	D= Diameter mm	Breaking current kA	Weight (kg/1)	Pack
40 A	30 147 36	3.00	76	40	3.6	1
50 A	30 147 36	3.00	76	40	3.6	1
63 A	30 147 36	3.00	76	40	3.6	1
80 A	30 147 36	3.00	76	40	3.6	1
100 A	30 147 36	3.00	76	40	3.6	1
125 A	30 147 36	3.00	76	40	3.6	1

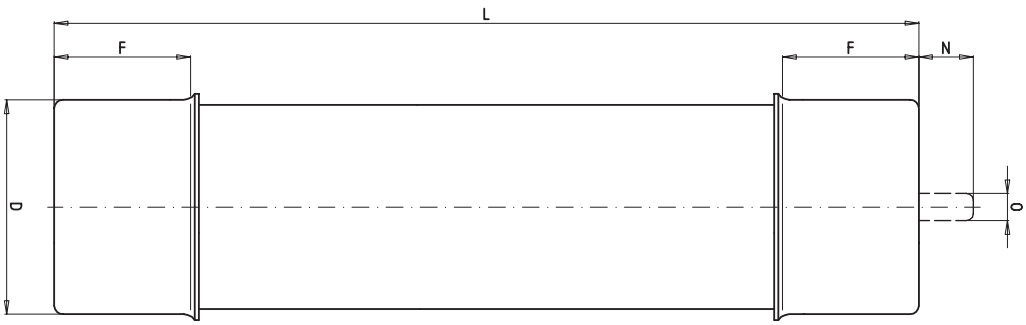

F	1.57 ”	(40 mm)
N	0.50 ”	(13 mm)
O	0.31 ”	(8 mm)

HHB

SIBA FUSES

MEDIUM VOLTAGE FUSES

BRITISH STANDARD

FOR AIR INSULATED SWITCHGEARS

Length	Rated voltage	Class	Standard
L= 565 mm	**AC 24 kV**	**Back up / in Air**	**BS 2692 · IEC 60282-1 · ESI 12-8**

Rated current	Part No.	D= Diameter inch	D= Diameter mm	Breaking current kA	Weight (kg/1)	Pack
6.3 A	30 244 36	2.00	51	31.5	5.6	1
10 A	30 244 36	2.00	51	31.5	5.6	1
16 A	30 244 36	2.00	51	31.5	5.6	1
20 A	30 244 36	2.00	51	31.5	5.6	1
25 A	30 244 36	2.00	51	31.5	5.6	1
31.5 A	30 244 36	2.00	51	31.5	5.6	1
40 A	30 244 36	2.00	51	31.5	5.6	1

Length	Rated voltage	Class	Standard
L= 565 mm	**AC 24 kV**	**Back up / in Air**	**BS 2692 · IEC 60282-1 · ESI 12-8**

Rated current	Part No.	D= Diameter inch	D= Diameter mm	Breaking current kA	Weight (kg/1)	Pack
6.3 A	30 161 36	3.00	76	31.5	5.6	1
10 A	30 161 36	3.00	76	31.5	5.6	1
16 A	30 161 36	3.00	76	31.5	5.6	1
20 A	30 161 36	3.00	76	31.5	5.6	1
25 A	30 161 36	3.00	76	31.5	5.6	1
31.5 A	30 161 36	3.00	76	31.5	5.6	1
40 A	30 161 36	3.00	76	31.5	5.6	1
50 A	30 161 36	3.00	76	31.5	5.6	1
63 A	30 161 36	3.00	76	31.5	5.6	1
80 A	30 161 36	3.00	76	31.5	5.6	1
100 A	30 161 36	3.00	76	31.5	5.6	1

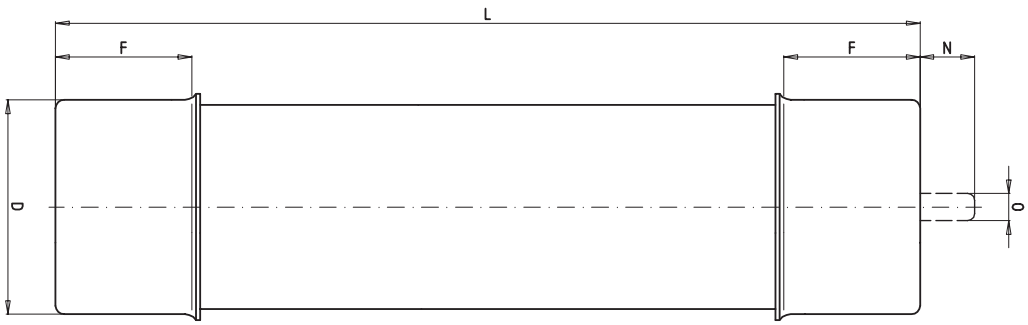

F	**1.57 ”**	(40 mm)
N	**0.50 ”**	(13 mm)
O	**0.31 ”**	(8 mm)

MEDIUM VOLTAGE FUSES

BRITISH STANDARD

FOR AIR INSULATED SWITCHGEARS

Type	Rated voltage	Class	Standard
TA 3	**AC 7.2 kV**	**Back up / in Air**	**BS 2692 · IEC 60282-1 · ESI 12-8**

Rated current	Part No.	D= Diameter inch	D= Diameter mm	Breaking current kA	Weight (kg/1)	Pack
6.3 A	30 246 36	2.00	51	40	3.9	1
10 A	30 246 36	2.00	51	40	3.9	1
16 A	30 246 36	2.00	51	40	3.9	1
20 A	30 246 36	2.00	51	40	3.9	1
25 A	30 246 36	2.00	51	40	3.9	1
31.5 A	30 246 36	2.00	51	40	3.9	1
40 A	30 246 36	2.00	51	40	3.9	1
50 A	30 246 36	2.00	51	40	3.9	1
63 A	30 246 36	2.00	51	40	3.9	1
80 A	30 246 36	2.00	51	40	3.9	1

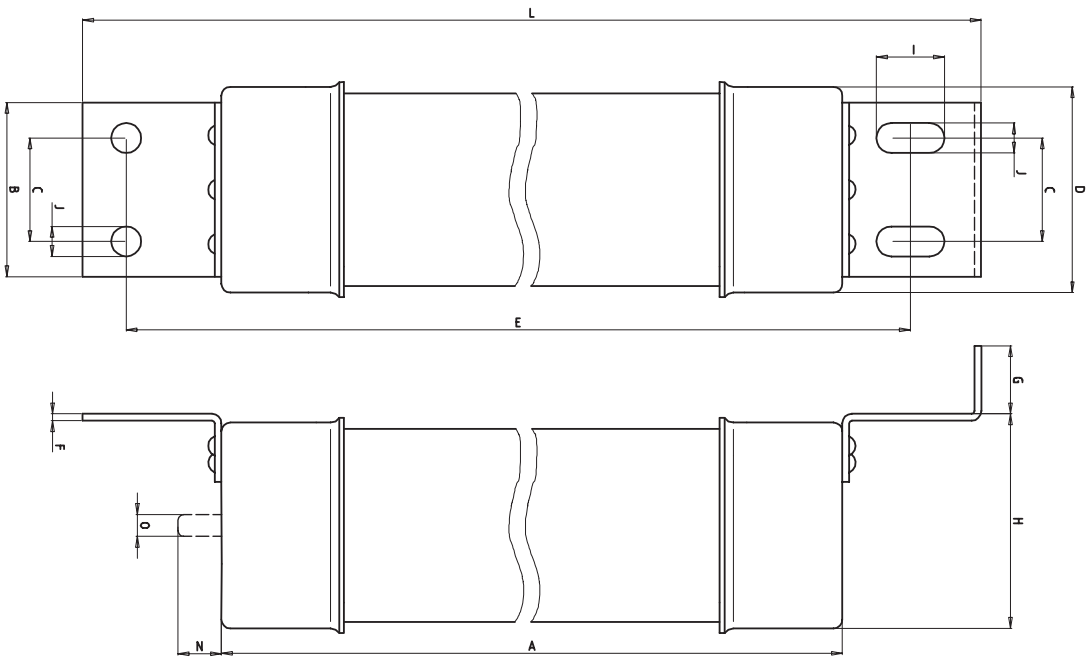

A	**14.13 ”**	(359 mm)
B	**2.56 ”**	(65 mm)
C	**1.50 ”**	(38 mm)
E	**16.50 ”**	(419 mm)
F	**0.10 ”**	(2.5 mm)
G	**0.98 ”**	(25 mm)
H	**2.60 ”**	(66 mm)
I	**0.98 ”**	(25 mm)
J	**0.43 ”**	(11 mm)
L	**18.27 ”**	(464 mm)
N	**0.50 ”**	(13 mm)
O	**0.31 ”**	(8 mm)

HHB

SIBA FUSES

MEDIUM VOLTAGE FUSES

BRITISH STANDARD

FOR AIR INSULATED SWITCHGEARS

Type	Rated voltage	Class	Standard
TA 3	**AC 7.2 kV**	**Back up**	**BS 2692 · IEC 60282-1 · ESI 12-8**

Rated current	Part No.	D= Diameter inch	D= Diameter mm	Breaking current kA	Weight (kg/1)	Pack
80 A	30 249 36	3.00	76	40	4.2	1
90 A	30 249 36	3.00	76	40	4.2	1
100 A	30 249 36	3.00	76	40	4.2	1
125 A	30 249 36	3.00	76	40	4.2	1
140 A	30 249 36	3.00	76	40	4.2	1
160 A	30 249 36	3.00	76	40	4.2	1

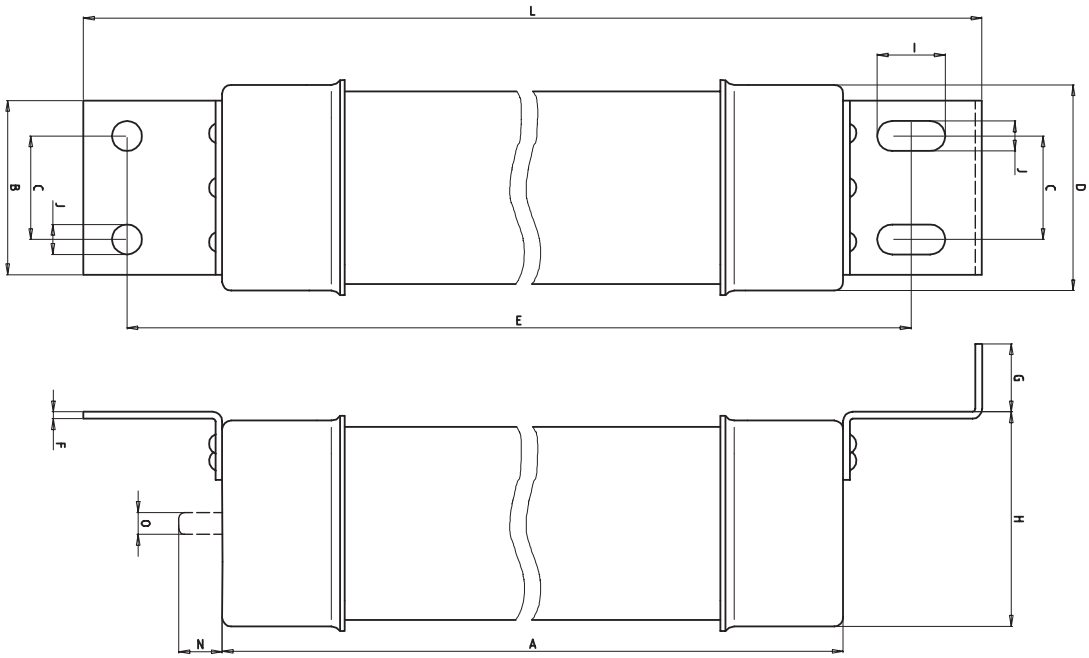

A	**14.13 ”**	(359 mm)
B	**2.56 ”**	(65 mm)
C	**1.50 ”**	(38 mm)
E	**16.50 ”**	(419 mm)
F	**0.10 ”**	(2.5 mm)
G	**0.98 ”**	(25 mm)
H	**2.60 ”**	(66 mm)
I	**0.98 ”**	(25 mm)
J	**0.43 ”**	(11 mm)
L	**18.27 ”**	(464 mm)
N	**0.50 ”**	(13 mm)
O	**0.31 ”**	(8 mm)

SIBA FUSES

HHB

MEDIUM VOLTAGE FUSES
BRITISH STANDARD

FOR AIR INSULATED SWITCHGEARS

Type	Rated voltage	Class	Standard
TA 3	**AC 12 kV**	**Back up**	**BS 2692 · IEC 60282-1 · ESI 12-8**

Rated current	Part No.	D= Diameter inch	D= Diameter mm	Breaking current kA	Weight (kg/1)	Pack
6.3 A	30 247 36	2.00	51	40	3.9	1
10 A	30 247 36	2.00	51	40	3.9	1
16 A	30 247 36	2.00	51	40	3.9	1
20 A	30 247 36	2.00	51	40	3.9	1
25 A	30 247 36	2.00	51	40	3.9	1
31.5 A	30 247 36	2.00	51	40	3.9	1
40 A	30 247 36	2.00	51	40	3.9	1
50 A	30 247 36	2.00	51	40	3.9	1

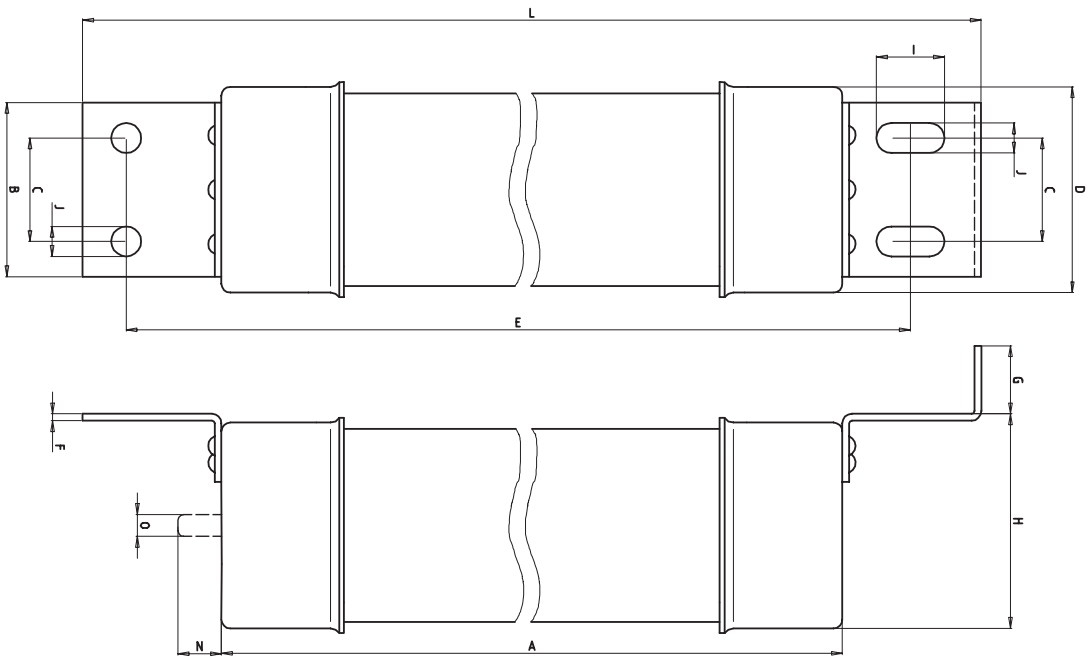

A	**14.13 ”**	(359 mm)
B	**2.56 ”**	(65 mm)
C	**1.50 ”**	(38 mm)
E	**16.50 ”**	(419 mm)
F	**0.10 ”**	(2.5 mm)
G	**0.98 ”**	(25 mm)
H	**2.60 ”**	(66 mm)
I	**0.98 ”**	(25 mm)
J	**0.43 ”**	(11 mm)
L	**18.27 ”**	(464 mm)
N	**0.50 ”**	(13 mm)
O	**0.31 ”**	(8 mm)

HHB

SIBA FUSES

MEDIUM VOLTAGE FUSES

BRITISH STANDARD

FOR AIR INSULATED SWITCHGEARS

Type	Rated voltage	Class	Standard
TA 3	**AC 12 kV**	**Back up**	**BS 2692 · IEC 60282-1 · ESI 12-8**

Rated current	Part No.	D= Diameter inch	D= Diameter mm	Breaking current kA	Weight (kg/1)	Pack
50 A	30 250 36	3.00	76	40	4.2	1
63 A	30 250 36	3.00	76	40	4.2	1
80 A	30 250 36	3.00	76	40	4.2	1
90 A	30 250 36	3.00	76	40	4.2	1
100 A	30 250 36	3.00	76	40	4.2	1
125 A	30 250 36	3.00	76	40	4.2	1

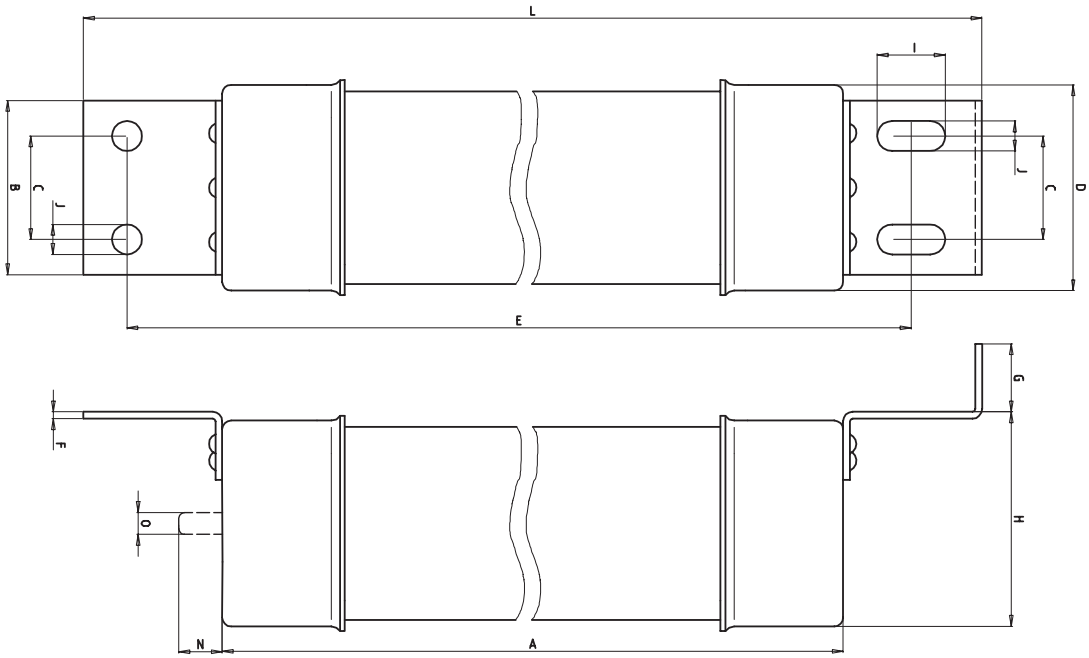

A	**14.13 ”**	(359 mm)
B	**2.56 ”**	(65 mm)
C	**1.50 ”**	(38 mm)
E	**16.50 ”**	(419 mm)
F	**0.10 ”**	(2.5 mm)
G	**0.98 ”**	(25 mm)
H	**2.60 ”**	(66 mm)
I	**0.98 ”**	(25 mm)
J	**0.43 ”**	(11 mm)
L	**18.27 ”**	(464 mm)
N	**0.50 ”**	(13 mm)
O	**0.31 ”**	(8 mm)

SIBA FUSES

HHB

MEDIUM VOLTAGE FUSES
BRITISH STANDARD

FOR AIR INSULATED SWITCHGEARS

Type	Rated voltage	Class	Standard
TA 3	**AC 24 kV**	**Back up**	**BS 2692 · IEC 60282-1 · ESI 12-8**

Rated current	Part No.	D= Diameter inch	D= Diameter mm	Breaking current kA	Weight (kg/1)	Pack
6.3 A	30 248 36	2.00	51	40	3.9	1
10 A	30 248 36	2.00	51	40	3.9	1
16 A	30 248 36	2.00	51	40	3.9	1
20 A	30 248 36	2.00	51	40	3.9	1
25 A	30 248 36	2.00	51	40	3.9	1
31.5 A	30 248 36	2.00	51	40	3.9	1
40 A	30 248 36	2.00	51	40	3.9	1

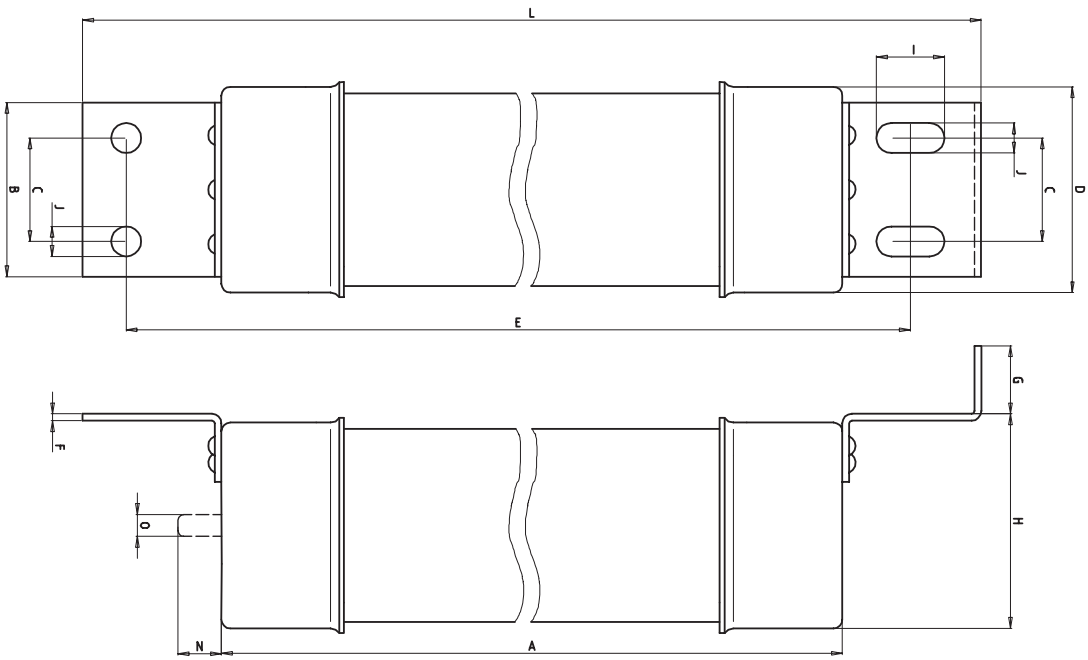

A	**14.13 ”**	(359 mm)
B	**2.56 ”**	(65 mm)
C	**1.50 ”**	(38 mm)
E	**16.50 ”**	(419 mm)
F	**0.10 ”**	(2.5 mm)
G	**0.98 ”**	(25 mm)
H	**2.60 ”**	(66 mm)
I	**0.98 ”**	(25 mm)
J	**0.43 ”**	(11 mm)
L	**18.27 ”**	(464 mm)
N	**0.50 ”**	(13 mm)
O	**0.31 ”**	(8 mm)

HHB

SIBA FUSES

MEDIUM VOLTAGE FUSES

BRITISH STANDARD

FOR AIR INSULATED SWITCHGEARS

Type	Rated voltage	Class	Standard
TA 3	**AC 24 kV**	**Back up**	**BS 2692 · IEC 60282-1 · ESI 12-8**

Rated current	Part No.	D= Diameter inch	D= Diameter mm	Breaking current kA	Weight (kg/1)	Pack
50 A	30 251 36	3.00	76	40	4.2	1
63 A	30 251 36	3.00	76	40	4.2	1
80 A	30 251 36	3.00	76	40	4.2	1

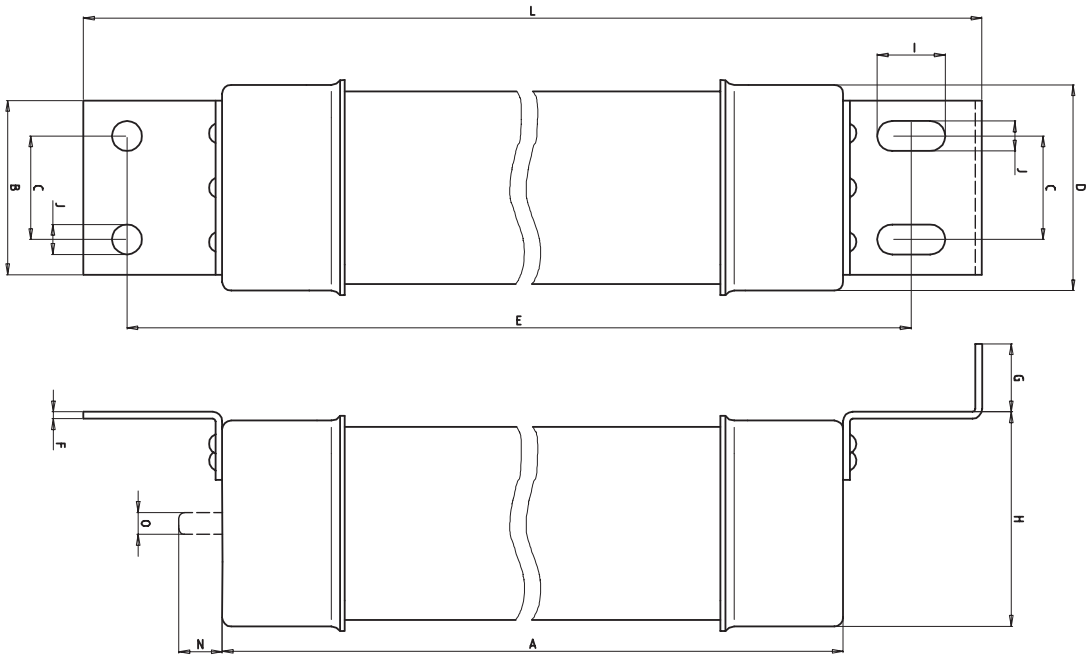

A	**14.13 ”**	(359 mm)
B	**2.56 ”**	(65 mm)
C	**1.50 ”**	(38 mm)
E	**16.50 ”**	(419 mm)
F	**0.10 ”**	(2.5 mm)
G	**0.98 ”**	(25 mm)
H	**2.60 ”**	(66 mm)
I	**0.98 ”**	(25 mm)
J	**0.43 ”**	(11 mm)
L	**18.27 ”**	(464 mm)
N	**0.50 ”**	(13 mm)
O	**0.31 ”**	(8 mm)

Length	Rated voltage	use under oil
L= 254 mm	**AC 7.2 kV**	**oiltight**

Rated current	Part No.	Breaking current kA	Pre-arcing I^2t-value A^2s	Total I^2t value @ 3 kV A^2s	Total I^2t value @ 7.2 kV A^2s
6.3 A	30 132 36	40	14	80	140
10 A	30 132 36	40	50	270	450
16 A	30 132 36	40	190	1,070	1,800
20 A	30 132 36	40	290	1,680	2,900
25 A	30 132 36	40	600	3,670	6,100
31.5 A	30 132 36	40	1,000	6,000	10,000
40 A	30 132 36	40	2,300	13,400	22,300
50 A	30 132 36	40	2,800	21,600	36,000
63 A	30 132 36	40	6,500	38,200	65,500
80 A	30 132 36	40	9,900	56,500	100,000
90 A	30 132 36	40	15,500	91,400	157,000
100 A	30 132 36	40	22,200	127,200	218,500
112 A	30 132 36	40	28,300	166,700	278,000
125 A	30 132 36	40	37,100	218,500	364,200
145 A	30 132 36	40	50,100	286,400	507,000
160 A	30 132 36	40	68,000	386,000	677,000

Length	Rated voltage	use under oil
L= 359 mm	**AC 7.2 kV**	**oiltight**

Rated current	Part No.	Breaking current kA	Pre-arcing I^2t-value A^2s	Total I^2t value @ 3 kV A^2s	Total I^2t value @ 7.2 kV A^2s
125 A	30 234 36	40	37,100	218,500	364,200
145 A	30 234 36	40	50,100	286,400	507,000

TIME CURRENT CHARACTERISTICS AND CUT OFF CURRENT DIAGRAM
PLEASE REFER TO PAGES HHB 30 AND HHB 31

Length
L= 254 mm

Rated voltage
AC 12 kV

use under oil
oiltight

Rated current	Part No.	Breaking current kA	Pre-arcing I²t-value A²s	Total I²t value @ 6 kV A²s	Total I²t value @ 12 kV A²s
6.3 A	30 144 36	40	14	80	140
10 A	30 144 36	40	50	270	450
16 A	30 144 36	40	190	1,070	1,800
20 A	30 144 36	40	290	1,680	2,900
25 A	30 144 36	40	600	3,670	6,100
31.5 A	30 144 36	40	1,000	6,000	10,000
40 A	30 144 36	40	2,300	13,400	22,300
50 A	30 144 36	40	2,800	21,600	36,000
63 A	30 144 36	40	6,500	38,200	65,500
80 A	30 144 36	40	9,900	56,500	100,000
90 A	30 144 36	40	15,500	91,400	157,000
100 A	30 144 36	40	22,200	127,200	218,500

Length
L= 359 mm

Rated voltage
AC 12 kV

use under oil
oiltight

Rated current	Part No.	Breaking current kA	Pre-arcing I²t-value A²s	Total I²t value @ 6 kV A²s	Total I²t value @ 12 kV A²s
6.3 A	30 237 36	40	14	80	140
10 A	30 237 36	40	50	270	450
16 A	30 237 36	40	190	1,070	1,800
20 A	30 237 36	40	290	1,680	2,900
25 A	30 237 36	40	600	3,670	6,100
31.5 A	30 237 36	40	1,000	6,000	10,000
40 A	30 237 36	40	2,300	13,400	22,300
50 A	30 237 36	40	2,800	21,600	36,000
63 A	30 237 36	40	6,500	38,200	65,500
80 A	30 237 36	40	9,900	56,500	100,000
100 A	30 237 36	40	22,200	127,200	218,500
112 A	30 237 36	40	28,300	166,700	278,000
125 A	30 237 36	40	37,100	218,500	364,200
145 A	30 237 36	40	50,100	286,400	507,000

TIME CURRENT CHARACTERISTICS AND CUT OFF CURRENT DIAGRAM
PLEASE REFER TO PAGES HHB 30 AND HHB 31

Length	Rated voltage	use under oil
L= 254 mm	**AC 15.5 kV**	**oiltight**

Rated current	Part No.	Breaking current kA	Pre-arcing I^2t-value A^2s	Total I^2t value @ 10 kV A^2s	Total I^2t value @ 15.5 kV A^2s
6.3 A	30 293 36	40	14	80	140
10 A	30 293 36	40	50	270	450
16 A	30 293 36	40	190	1,070	1,800
20 A	30 293 36	40	290	1,680	2,900
25 A	30 293 36	40	600	3,670	6,100
31.5 A	30 293 36	40	1,000	6,000	10,000
40 A	30 293 36	40	2,300	13,400	22,300
50 A	30 293 36	40	2,800	21,600	36,000
63 A	30 293 36	40	6,500	38,200	65,500
80 A	30 293 36	40	9,900	56,500	100,000
90 A	30 293 36	40	15,500	91,400	157,000
100 A	30 293 36	40	22,200	127,200	218,500

Length	Rated voltage	use under oil
L= 359 mm	**AC 15.5 kV**	**oiltight**

Rated current	Part No.	Breaking current kA	Pre-arcing I^2t-value A^2s	Total I^2t value @ 10 kV A^2s	Total I^2t value @ 15.5 kV A^2s
6.3 A	30 294 36	40	14	80	140
10 A	30 294 36	40	50	270	450
16 A	30 294 36	40	190	1,070	1,800
20 A	30 294 36	40	290	1,680	2,900
25 A	30 294 36	40	600	3,670	6,100
31.5 A	30 294 36	40	1,000	6,000	10,000
40 A	30 294 36	40	2,300	13,400	22,300
50 A	30 294 36	40	2,800	21,600	36,000
63 A	30 294 36	40	6,500	38,200	65,500
80 A	30 294 36	40	9,900	56,500	100,000

TIME CURRENT CHARACTERISTICS AND CUT OFF CURRENT DIAGRAM
PLEASE REFER TO PAGES HHB 30 AND HHB 31

Length
L= 359 mm

Rated voltage
AC 24 kV

use under oil
oiltight

Rated current	Part No.	Breaking current kA	Pre-arcing I^2t-value A^2s	Total I^2t value @ 10 kV A^2s	Total I^2t value @ 24 kV A^2s
6.3 A	30 156 36	40	14	80	140
10 A	30 156 36	40	50	270	450
16 A	30 156 36	40	190	1,070	1,800
20 A	30 156 36	40	290	1,680	2,900
25 A	30 156 36	40	600	3,670	6,100
31.5 A	30 156 36	40	1,000	6,000	10,000
40 A	30 156 36	40	2,300	13,400	22,300
50 A	30 156 36	40	2,800	21,600	36,000

TIME CURRENT CHARACTERISTICS AND CUT OFF CURRENT DIAGRAM
PLEASE REFER TO PAGES HHB 30 AND HHB 31

Length **L= 254 mm** | Rated voltage **AC 7.2 kV** | **use in air**

Rated current	Part No.	Breaking current kA	Pre-arcing I²t-value A²s	Total I²t value @ 3 kV A²s	Total I²t value @ 7.2 kV A²s
6.3 A	30 241 36	40	50	100	150
10 A	30 241 36	40	120	230	340
16 A	30 241 36	40	270	530	800
20 A	30 241 36	40	650	1,300	1,950
25 A	30 241 36	40	1,160	2,400	3,500
31.5 A	30 241 36	40	2,200	4,400	6,500
40 A	30 241 36	40	4,900	10,000	14,800
50 A	30 241 36	40	8,100	16,200	24,000
63 A	30 241 36	40	16,200	32,600	48,000
80 A	30 135 36	40	27,200	54,600	81,000
100 A	30 135 36	40	52,900	110,000	158,000

Length **L= 359 mm** | Rated voltage **AC 7.2 kV** | **use in air**

Rated current	Part No.	Breaking current kA	Pre-arcing I²t-value A²s	Total I²t value @ 3 kV A²s	Total I²t value @ 7.2 kV A²s
6.3 A	30 242 36	40	50	100	150
10 A	30 242 36	40	120	230	340
16 A	30 242 36	40	270	530	800
20 A	30 242 36	40	650	1,300	1,950
25 A	30 242 36	40	1,160	2,400	3,500
31.5 A	30 242 36	40	2,200	4,400	6,500
40 A	30 242 36	40	4,900	10,000	14,800
50 A	30 242 36	40	8,100	16,200	24,000
63 A	30 242 36	40	16,200	32,600	48,000
80 A	30 242 36	40	27,200	54,600	81,000
100 A	30 137 36	40	52,900	110,000	158,000
125 A	30 137 36	40	81,000	162,000	241,000
140 A	30 137 36	40	100,000	200,000	300,000
160 A	30 137 36	40	126,000	252,000	378,000

TIME CURRENT CHARACTERISTICS AND CUT OFF CURRENT DIAGRAM
PLEASE REFER TO PAGES HHB 32 AND HHB 33

Length
L= 254 mm

Rated voltage
AC 12 kV

use in air

Rated current	Part No.	Breaking current kA	Pre-arcing I²t-value A²s	Total I²t value @ 6 kV A²s	Total I²t value @ 12 kV A²s
6.3 A	30 141 36	40	50	100	150
10 A	30 141 36	40	120	230	340
16 A	30 141 36	40	270	530	800
20 A	30 141 36	40	650	1,300	1,950
25 A	30 141 36	40	1,160	2,400	3,500
31.5 A	30 141 36	40	2,200	4,400	6,500
40 A	30 141 36	40	4,900	10,000	14,800
50 A	30 141 36	40	8,100	16,200	24,000

Length
L= 359 mm

Rated voltage
AC 12 kV

use in air

Rated current	Part No.	Breaking current kA	Pre-arcing I²t-value A²s	Total I²t value @ 6 kV A²s	Total I²t value @ 12 kV A²s
6.3 A	30 243 36	40	50	100	150
10 A	30 243 36	40	120	230	340
16 A	30 243 36	40	270	530	800
20 A	30 243 36	40	650	1,300	1,950
25 A	30 243 36	40	1,160	2,400	3,500
31.5 A	30 243 36	40	2,200	4,400	6,500
40 A	30 243 36	40	4,900	10,000	14,800
50 A	30 243 36	40	8,100	16,200	24,000

TIME CURRENT CHARACTERISTICS AND CUT OFF CURRENT DIAGRAM
PLEASE REFER TO PAGES HHB 32 AND HHB 33

Length **L= 254 mm** | Rated voltage **AC 12 kV** | **use in air**

Rated current	Part No.	Breaking current kA	Pre-arcing I^2t-value A^2s	Total I^2t value @ 6 kV A^2s	Total I^2t value @ 12 kV A^2s
40 A	30 145 36	40	4,900	10,000	14,800
50 A	30 145 36	40	8,100	16,200	24,000
63 A	30 145 36	40	16,200	32,600	48,000

Length **L= 359 mm** | Rated voltage **AC 12 kV** | **use in air**

Rated current	Part No.	Breaking current kA	Pre-arcing I^2t-value A^2s	Total I^2t value @ 6 kV A^2s	Total I^2t value @ 12 kV A^2s
50 A	30 147 36	40	8,100	16,200	24,000
63 A	30 147 36	40	16,200	32,600	48,000
80 A	30 147 36	40	27,200	54,600	81,000
100 A	30 147 36	40	52,900	110,000	158,000
125 A	30 147 36	40	81,000	162,000	241,000

TIME CURRENT CHARACTERISTICS AND CUT OFF CURRENT DIAGRAM
PLEASE REFER TO PAGES HHB 32 AND HHB 33

Length **L= 565 mm** | Rated voltage **AC 24 kV** | **use in air**

Rated current	Part No.	Breaking current kA	Pre-arcing I^2t-value A^2s	Total I^2t value @ 10 kV A^2s	Total I^2t value @ 24 kV A^2s
6.3 A	30 244 36	31.5	50	100	150
10 A	30 244 36	31.5	120	230	340
16 A	30 244 36	31.5	270	530	800
20 A	30 244 36	31.5	650	1,300	1,950
25 A	30 244 36	31.5	1,160	2,400	3,500
31.5 A	30 244 36	31.5	2,200	4,400	6,500
40 A	30 244 36	31.5	4,900	10,000	14,800

Length **L= 565 mm** | Rated voltage **AC 24 kV** | **use in air**

Rated current	Part No.	Breaking current kA	Pre-arcing I^2t-value A^2s	Total I^2t value @ 10 kV A^2s	Total I^2t value @ 24 kV A^2s
6.3 A	30 161 36	31.5	50	100	150
10 A	30 161 36	31.5	120	230	340
16 A	30 161 36	31.5	270	530	800
20 A	30 161 36	31.5	650	1,300	1,950
25 A	30 161 36	31.5	1,160	2,400	3,500
31.5 A	30 161 36	31.5	2,200	4,400	6,500
40 A	30 161 36	31.5	4,900	10,000	14,800
50 A	30 161 36	31.5	8,100	16,200	24,000
63 A	30 161 36	31.5	16,200	32,600	48,000
80 A	30 161 36	31.5	27,200	54,600	81,000
100 A	30 161 36	31.5	52,900	110,000	158,000

TIME CURRENT CHARACTERISTICS AND CUT OFF CURRENT DIAGRAM
PLEASE REFER TO PAGES HHB 32 AND HHB 33

Type	Rated voltage	use in air
TA 3	**AC 7.2 kV**	

Rated current	Part No.	Breaking current kA	Pre-arcing I^2t-value A^2s	Total I^2t value @ 3 kV A^2s	Total I^2t value @ 7.2 kV A^2s
6.3 A	30 246 36	40	50	100	150
10 A	30 246 36	40	120	230	340
16 A	30 246 36	40	270	530	800
20 A	30 246 36	40	650	1,300	1,950
25 A	30 246 36	40	1,160	2,400	3,500
31.5 A	30 246 36	40	2,200	4,400	6,500
40 A	30 246 36	40	4,900	10,000	14,800
50 A	30 246 36	40	8,100	16,200	24,000
63 A	30 246 36	40	16,200	32,600	48,000
80 A	30 246 36	40	27,200	54,600	81,000

Type	Rated voltage	use in air
TA 3	**AC 7.2 kV**	

Rated current	Part No.	Breaking current kA	Pre-arcing I^2t-value A^2s	Total I^2t value @ 3 kV A^2s	Total I^2t value @ 7.2 kV A^2s
80 A	30 249 36	40	27,200	54,600	81,000
100 A	30 249 36	40	52,900	110,000	158,000
125 A	30 249 36	40	81,000	162,000	241,000
140 A	30 249 36	40	100,000	200,000	300,000
160 A	30 249 36	40	126,000	252,000	378,000

TIME CURRENT CHARACTERISTICS AND CUT OFF CURRENT DIAGRAM
PLEASE REFER TO PAGES HHB 32 AND HHB 33

Type	Rated voltage	use in air
TA 3	**AC 12 kV**	

Rated current	Part No.	Breaking current kA	Pre-arcing I²t-value A²s	Total I²t value @ 6 kV A²s	Total I²t value @ 12 kV A²s
6.3 A	30 247 36	40	50	100	150
10 A	30 247 36	40	120	230	340
16 A	30 247 36	40	270	530	800
20 A	30 247 36	40	650	1,300	1,950
25 A	30 247 36	40	1,160	2,400	3,500
31.5 A	30 247 36	40	2,200	4,400	6,500
40 A	30 247 36	40	4,900	10,000	14,800
50 A	30 247 36	40	8,100	16,200	24,000

Type	Rated voltage	use in air
TA 3	**AC 12 kV**	

Rated current	Part No.	Breaking current kA	Pre-arcing I²t-value A²s	Total I²t value @ 6 kV A²s	Total I²t value @ 12 kV A²s
50 A	30 250 36	40	8,100	16,200	24,000
63 A	30 250 36	40	16,200	32,600	48,000
80 A	30 250 36	40	27,200	54,600	81,000
100 A	30 250 36	40	52,900	110,000	158,000
125 A	30 250 36	40	81,000	162,000	241,000

TIME CURRENT CHARACTERISTICS AND CUT OFF CURRENT DIAGRAM
PLEASE REFER TO PAGES HHB 32 AND HHB 33

Type	Rated voltage	use in air
TA 3	**AC 24 kV**	

Rated current	Part No.	Breaking current kA	Pre-arcing I^2t-value A^2s	Total I^2t value @ 10 kV A^2s	Total I^2t value @ 24 kV A^2s
6.3 A	30 248 36	40	50	100	150
10 A	30 248 36	40	120	230	340
16 A	30 248 36	40	270	530	800
20 A	30 248 36	40	650	1,300	1,950
25 A	30 248 36	40	1,160	2,400	3,500
31.5 A	30 248 36	40	2,200	4,400	6,500
40 A	30 248 36	40	4,900	10,000	14,800
50 A	30 251 36	40	8,100	16,200	24,000
63 A	30 251 36	40	16,200	32,600	48,000
80 A	30 251 36	40	27,200	54,600	81,000

TIME CURRENT CHARACTERISTICS AND CUT OFF CURRENT DIAGRAM
PLEASE REFER TO PAGES HHB 32 AND HHB 33

Time Current Characteristics

use under oil

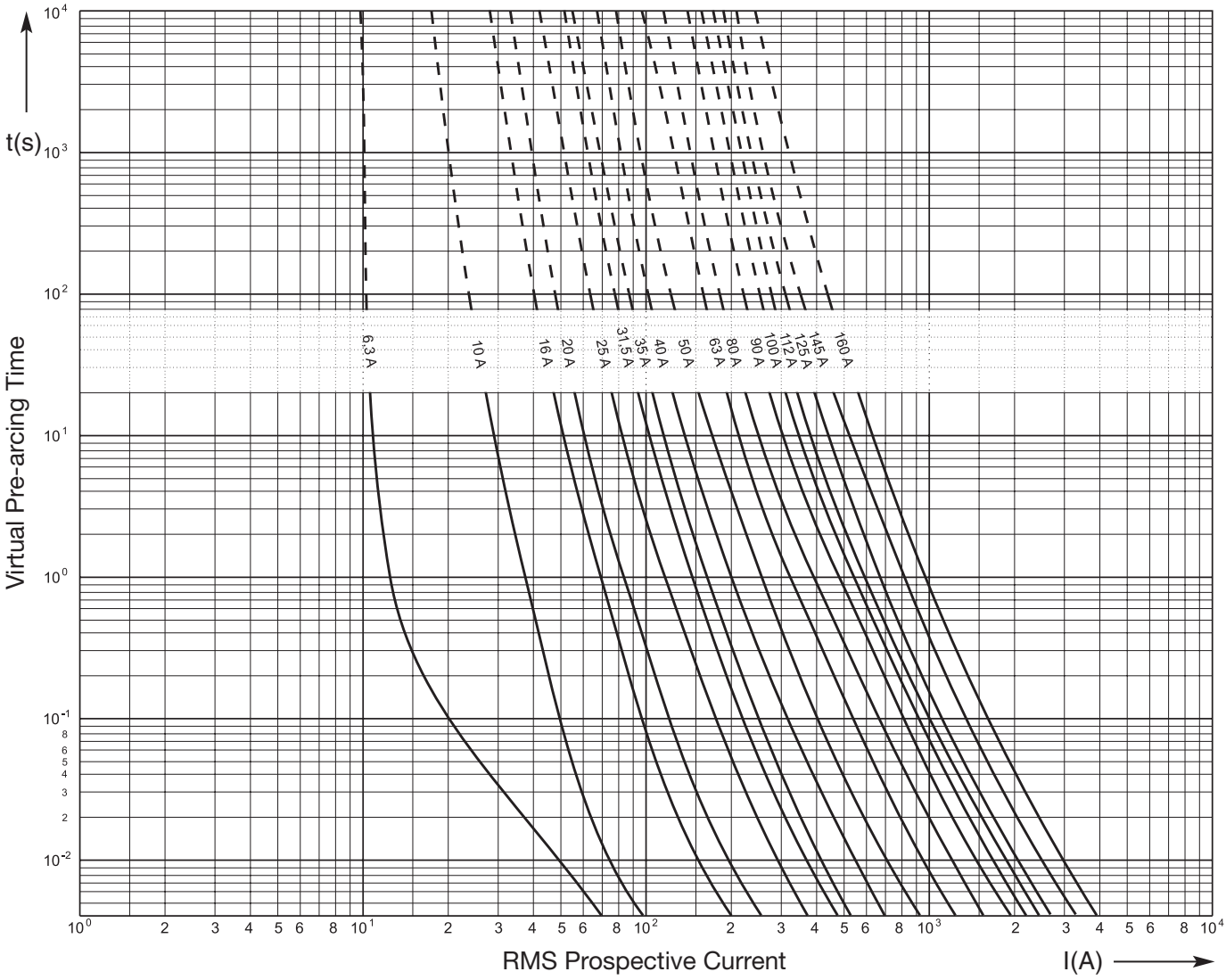

Applicable for all fuse links shown on pages HHB 3 - HHB 7

Cut Off Current Diagram

use under oil

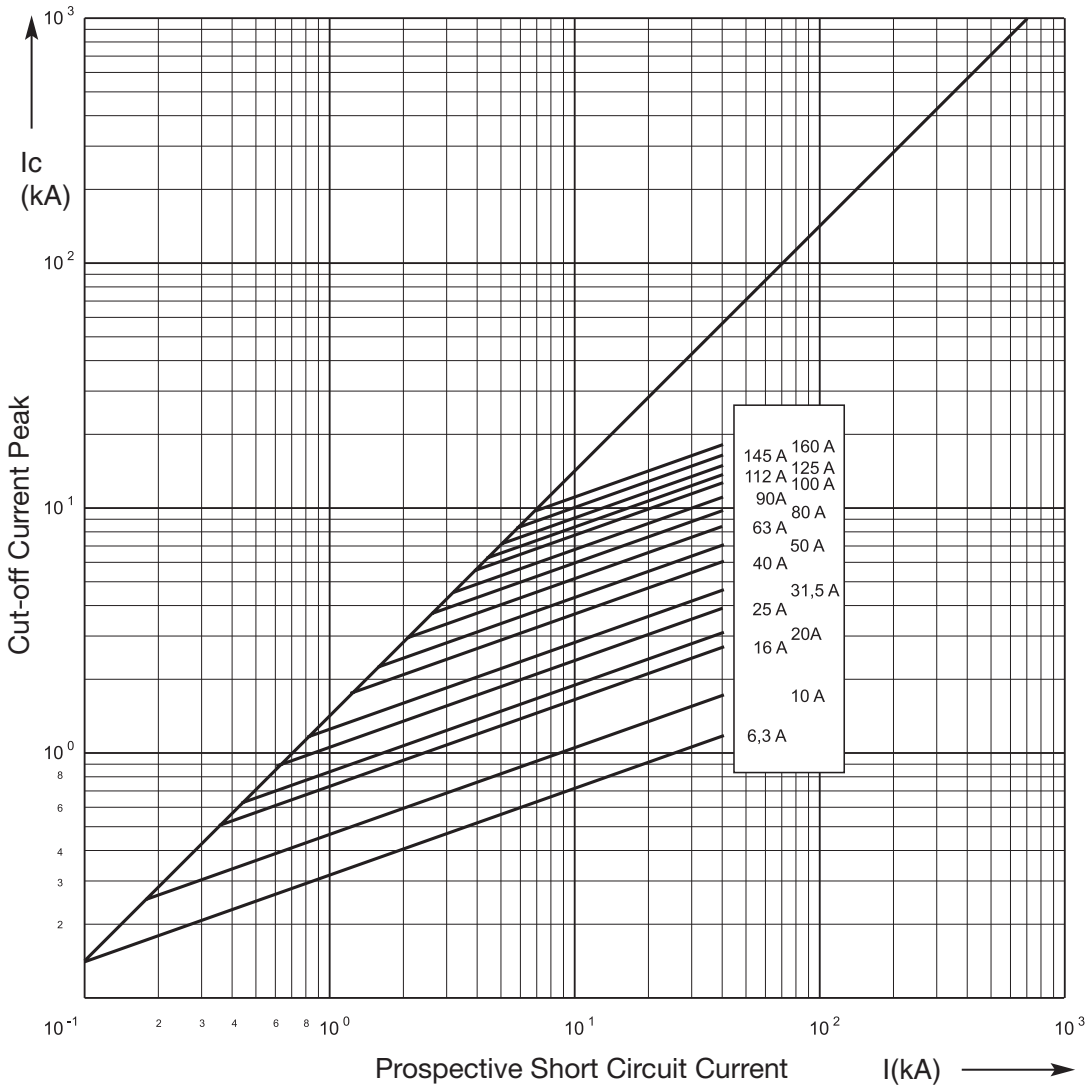

Applicable for all fuse links shown on pages HHB 3 - HHB 7

Time Current Characteristics

use in air

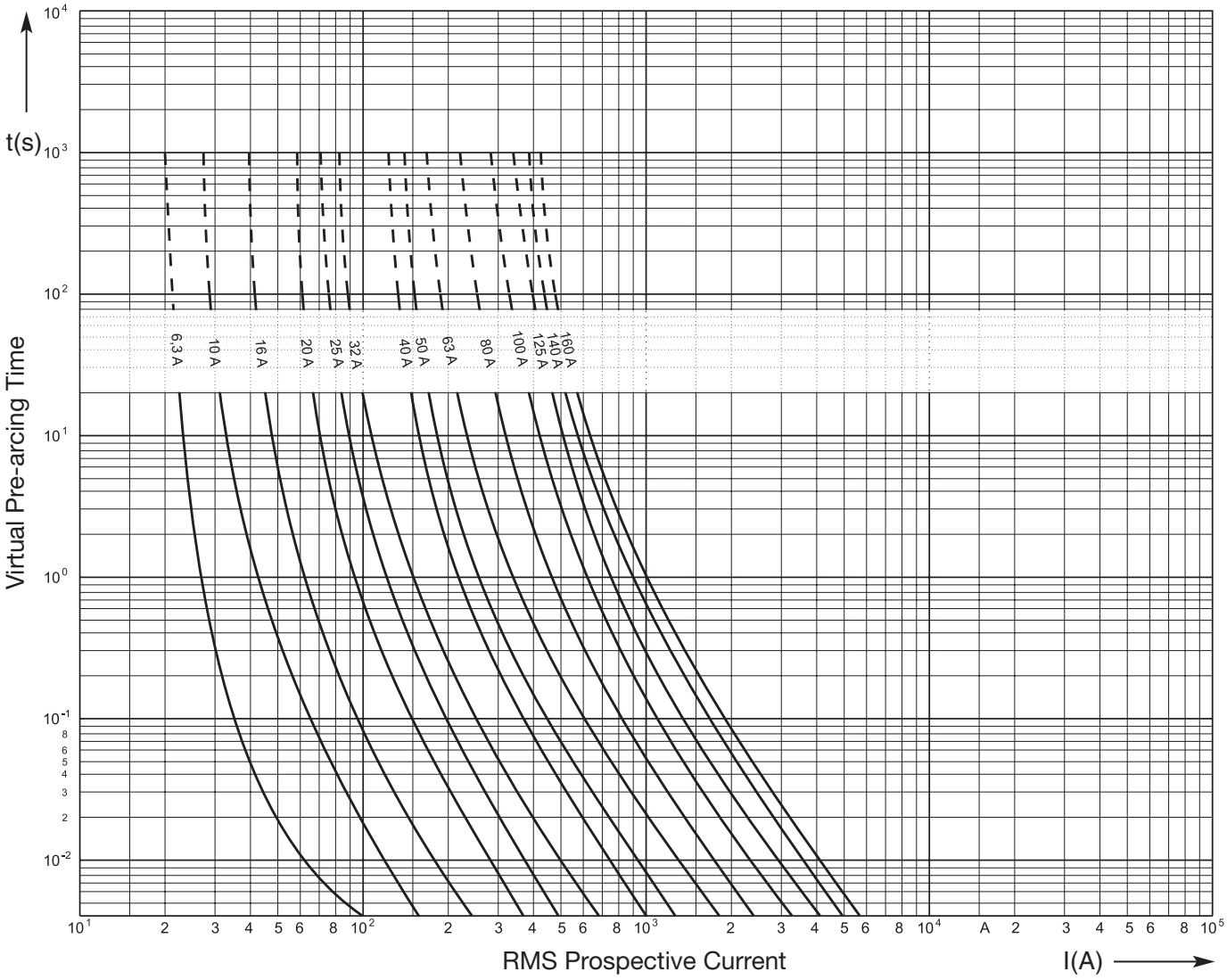

Applicable for all fuse links shown on pages HHB 8 - HHB 18

Cut Off Current Diagram

use in air

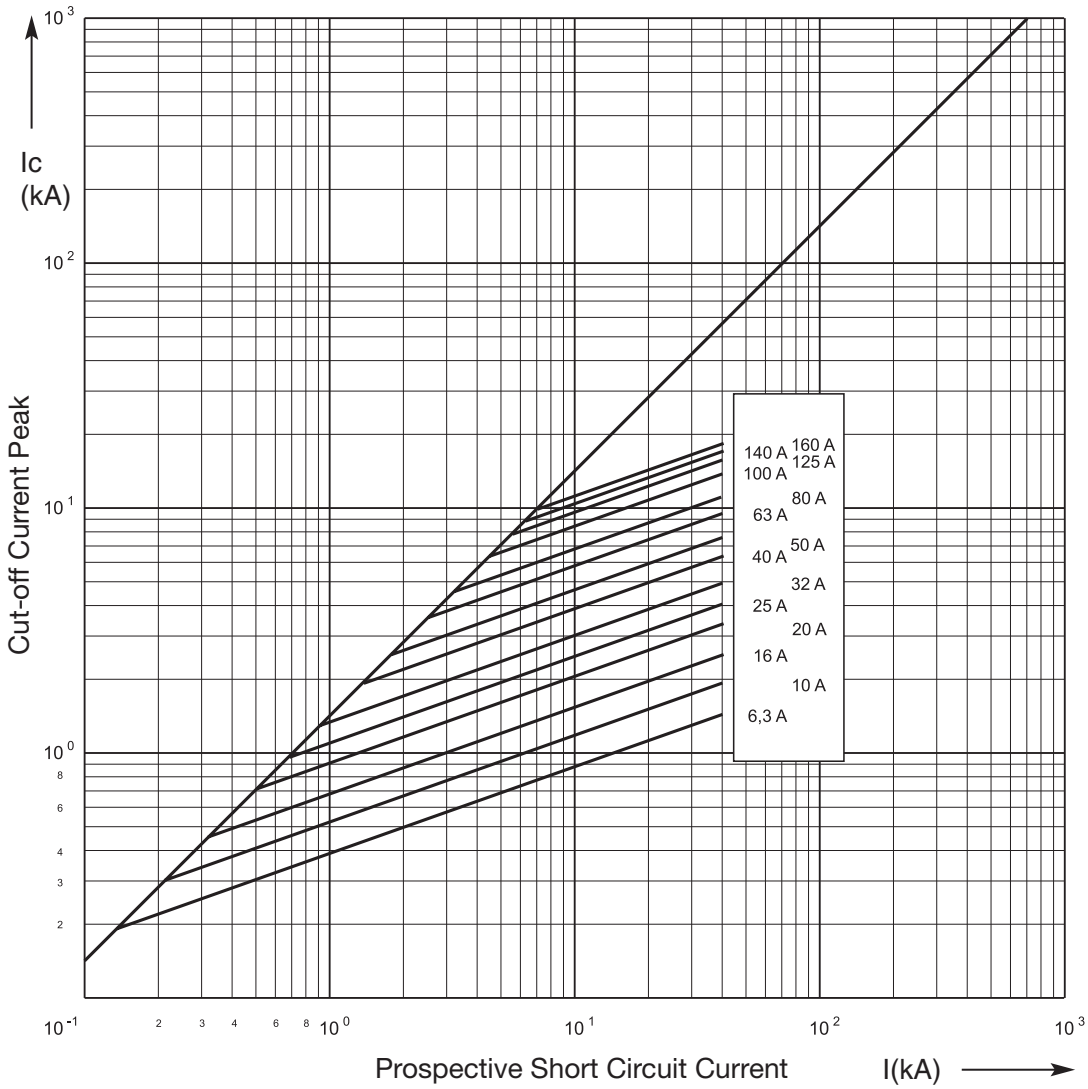

Applicable for all fuse links shown on pages HHB 8 - HHB 18

MEDIUM VOLTAGE FUSES

FRENCH STANDARD

FOR
AIR & GAS INSULATED SWITCHGEARS
OUTDOOR SWITCHGEARS

Introduction

High-Voltage fuse-links of size 55 x 520 mm are suitable for the protection of power transformers used in energy distribution. Usually they are used for indoor application, outdoor use is possible. In case of a short circuit the fuse will interrupt fault currents between five times the fuse rated current and the rated breaking current.

Standards: IEC 60282-1
NFC 64210

Design and construction

The fuse tubes are made of high grade ceramic and are brown glazed inside and outside. The contact caps are of electrolytic copper and silver plated. For the fuse elements pure silver is used. The melting elements are wound on a star shaped ceramic support.

For arc quenching the fuses are filled with quartz sand of certain grain size.

The fuses are available without an indicator or with an temperature limiting striker pin.

Selection of fuse

High-Voltage fuse-links of size 55 x 520 mm are back-up fuses. Values for fuse rated current / minimum breaking current as well as rated breaking current are given in the technical schedule.
For back-up fuses the minimum breaking current has to be observed which is the smallest current which the fuse can normally interrupt.

For selection of the correct fuse rated current for a certain transformer size, please refer to the recommendation list, on page HHF 6.

SIBA FUSES

MEDIUM VOLTAGE FUSES
FRENCH STANDARD

FOR
AIR & GAS INSULATED SWITCHGEARS
OUTDOOR SWITCHGEARS

Rated voltage	Class	Standard
AC 24 kV	**Back up**	**NFC 64210 · IEC 60282-1**

Rated current	Part No. without indicator	Part No. with striker pin	Breaking current kA	Weight (kg/1)	Pack
6.3 A	30 258 11	30 258 13	63	6	3
10 A	30 258 11	30 258 13	63	6	3
16 A	30 258 11	30 258 13	63	6	3
32 A	30 258 11	30 258 13	63	6	3
43 A	30 258 11	30 258 13	63	6	3
63 A	30 258 11	30 258 13	63	6	3

D	2.17 ”	(55 mm)
F	1.57 ”	(40 mm)
L	20.47 ”	(520 mm)
N	1.38 ”	(35 mm)
O	0.40 ”	(10 mm)

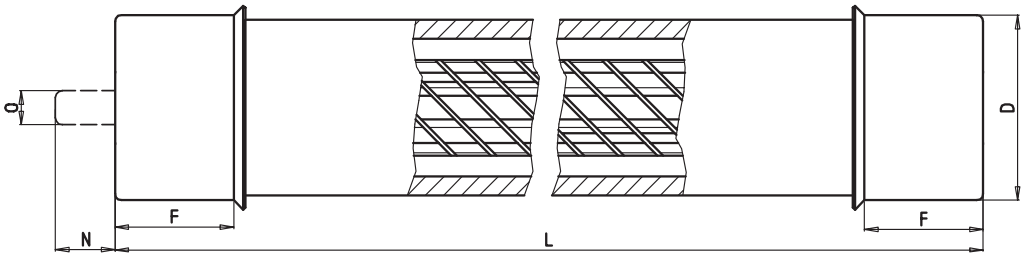

Rated voltage
AC 24 kV

Class
Back up

Rated current A	Part No. without indicator	Part No. with striker pin	Breaking current kA	Pre-arcing I^2t-value A^2s	Total I^2t-value at 24 kV A^2s
6.3	30 258 11	30 258 13	63	61	390
10	30 258 11	30 258 13	63	154	1,100
16	30 258 11	30 258 13	63	350	2,500
32	30 258 11	30 258 13	63	2,200	16,000
43	30 258 11	30 258 13	63	4,900	35,000
63	30 258 11	30 258 13	63	10,600	74,000

TIME CURRENT CHARACTERISTICS AND CUT OFF CURRENT DIAGRAM
PLEASE REFER TO PAGES HHF 4 AND HHF 5

Time Current Characteristics

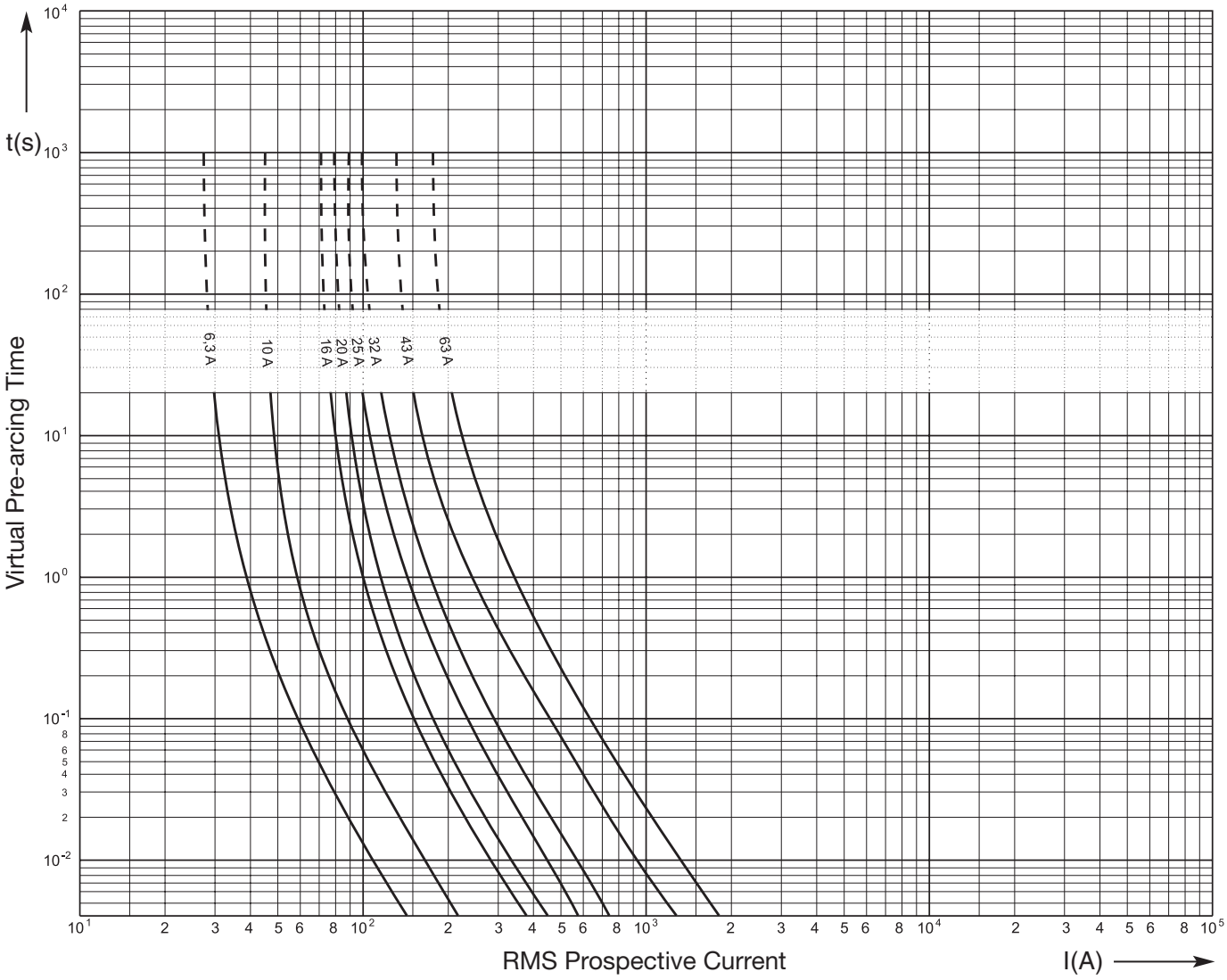

Cut Off Current Diagram

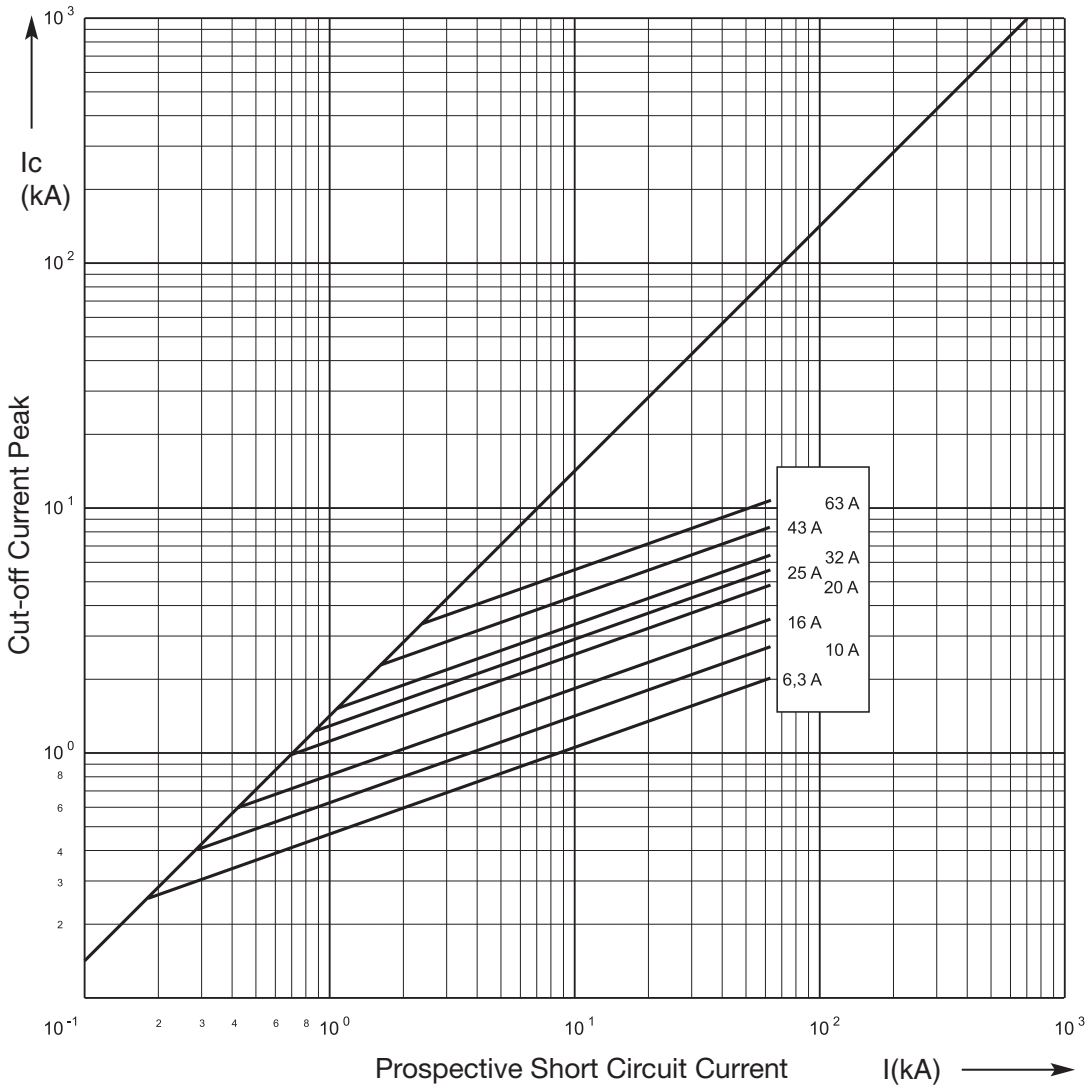

Recommendation for protection of main transformer

Rated Voltage kV	Transformer rated capacitiy kVA						
	50	100	160	250	400	630	1000
10	6.3	16	32	32	63	63	-
15	6.3	16	16	16	43	43	63
20	6.3	6.3	16	16	43	43	43

MEDIUM VOLTAGE FUSES FOR CAPACITORS

NORTH AMERICAN STYLE

SIBA Capacitor protection fuses can easily be fitted direct onto capacitor bushings, because they are fitted with threaded holes at both ends.

Their electrical characteristic suits the protection requirements of capacitors.

The capacitor fuses are available in the following ratings:

Voltage ratings:	4.8 / 7.2 / 15.5 kV
Amp. ratings:	6.3 - 250 A

Features/Benefits

- Standards: IEC 60 282-1 · IEC 60 549
- High interrupting rating 63 kA
- Characteristic following capacitor protection needs for back up protection
- Suitable for direct fitting onto capacitor bushing
- Cartridge type current limiting
- Special mounting brackets available on request

SIBA FUSES

Selection Guide

Thread	Rated Voltage AC kV	Diameter mm	Class	Part No.	Selector Guide Page	Techn. Data Page
1/2” UNC	4.8	63.5	Back up	30 349 21	HHC 3	HHC 9
1/2” UNC	4.8	76	Back up	30 350 21	HHC 3	HHC 9
1/2” UNC	4.8	76	Back up	30 351 21	HHC 3	HHC 9
1/2” UNC	7.2	63.5	Back up	30 352 21	HHC 4	HHC 9
1/2” UNC	7.2	76	Back up	30 353 21	HHC 4	HHC 9
1/2” UNC	15.5	63.5	Back up	30 354 21	HHC 5	HHC 10
M16	4.8	63.5	Back up	30 356 21	HHC 6	HHC 10
M16	4.8	76	Back up	30 357 21	HHC 6	HHC 10
M16	4.8	76	Back up	30 358 21	HHC 6	HHC 10
M16	7.2	63.5	Back up	30 359 21	HHC 7	HHC 11
M16	7.2	76	Back up	30 360 21	HHC 7	HHC 11
M16	15.5	63.5	Back up	30 361 21	HHC 8	HHC 11

SIBA FUSES

HHC

MEDIUM VOLTAGE FUSES FOR CAPACITORS
NORTH AMERICAN STYLE

Rated voltage	Class	thread	Standard
AC 4.8 kV	**Back up**	**1/2" UNC**	**IEC 60 282-1 · IEC 60 549**

Rated current	Part No.	D= Diameter inch	D= Diameter mm	Rated breaking capacity kA	Weight (kg/1)	Pack
6.3 A	30 349 21	2.5	63.5	63	1.8	1
10 A	30 349 21	2.5	63.5	63	1.8	1
16 A	30 349 21	2.5	63.5	63	1.8	1
20 A	30 349 21	2.5	63.5	63	1.8	1
25 A	30 349 21	2.5	63.5	63	1.8	1
31.5 A	30 349 21	2.5	63.5	63	1.8	1
40 A	30 349 21	2.5	63.5	63	1.8	1
50 A	30 349 21	2.5	63.5	63	1.8	1
63 A	30 349 21	2.5	63.5	63	1.8	1
80 A	30 349 21	2.5	63.5	63	1.8	1
100 A	30 349 21	2.5	63.5	63	1.8	1
125 A	30 350 21	2.99	76	63	2.5	1
160 A	30 350 21	2.99	76	63	2.5	1
200 A	30 351 21	2.99	76	63	3.6	1
250 A	30 351 21	2.99	76	63	3.6	1

30 349 21/30 350 21

E	**10.00"** (254 mm)
L	**10.75"** (273 mm)
F	**1.57"** (40 mm)

30 351 21

E	**14.13"** (359 mm)
L	**14.88"** (378 mm)
F	**1.57"** (40 mm)

SIBA FUSES

MEDIUM VOLTAGE FUSES FOR CAPACITORS

NORTH AMERICAN STYLE

Rated voltage	Class	thread	Standard
AC 7.2 kV	**Back up**	**1/2" UNC**	**IEC 60 282-1 · IEC 60 549**

Rated current	Part No.	D= Diameter inch	D= Diameter mm	Rated breaking capacity kA	Weight (kg/1)	Pack
6.3 A	30 352 21	2.5	63.5	63	1.8	1
10 A	30 352 21	2.5	63.5	63	1.8	1
16 A	30 352 21	2.5	63.5	63	1.8	1
20 A	30 352 21	2.5	63.5	63	1.8	1
25 A	30 352 21	2.5	63.5	63	1.8	1
31.5 A	30 352 21	2.5	63.5	63	1.8	1
40 A	30 352 21	2.5	63.5	63	1.8	1
50 A	30 352 21	2.5	63.5	63	1.8	1
63 A	30 352 21	2.5	63.5	63	1.8	1
80 A	30 352 21	2.5	63.5	63	1.8	1
100 A	30 352 21	2.5	63.5	63	1.8	1
125 A	30 353 21	2.99	76	63	3.6	1
160 A	30 353 21	2.99	76	63	3.6	1
200 A	30 353 21	2.99	76	63	3.6	1

30 352 21

E	**10.00"** (254 mm)
L	**10.75"** (273 mm)
F	**1.57"** (40 mm)

30 353 21

E	**14.13"** (359 mm)
L	**14.88"** (378 mm)
F	**1.57"** (40 mm)

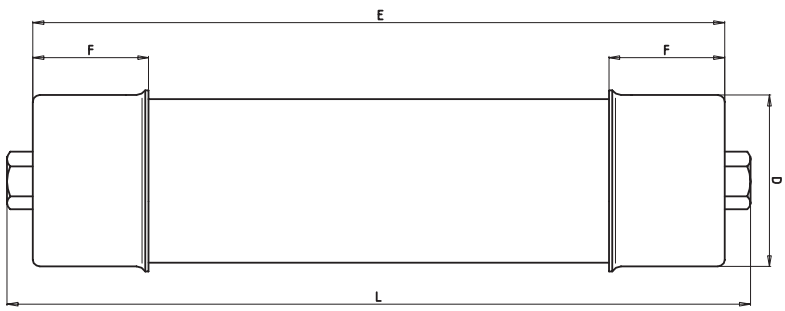

MEDIUM VOLTAGE FUSES FOR CAPACITORS

NORTH AMERICAN STYLE

Rated voltage	Class	thread	Standard
AC 15.5 kV	**Back up**	**1/2" UNC**	**IEC 60 282-1 · IEC 60 549**

Rated current	Part No.	D= Diameter inch	D= Diameter mm	Rated breaking capacity kA	Weight (kg/1)	Pack
6.3 A	30 354 21	2.5	63.5	63	2.5	1
10 A	30 354 21	2.5	63.5	63	2.5	1
16 A	30 354 21	2.5	63.5	63	2.5	1
20 A	30 354 21	2.5	63.5	63	2.5	1
25 A	30 354 21	2.5	63.5	63	2.5	1
31.5 A	30 354 21	2.5	63.5	63	2.5	1
40 A	30 354 21	2.5	63.5	63	2.5	1
50 A	30 354 21	2.5	63.5	63	2.5	1
63 A	30 354 21	2.5	63.5	63	2.5	1
80 A	30 354 21	2.5	63.5	63	2.5	1
100 A	30 354 21	2.5	63.5	63	2.5	1

E	**14.13"** (359 mm)
L	**14.88"** (378 mm)
F	**1.57"** (40 mm)

SIBA FUSES

MEDIUM VOLTAGE FUSES FOR CAPACITORS

NORTH AMERICAN STYLE

Rated voltage	Class	thread	Standard
AC 4.8 kV	**Back up**	**M16**	**IEC 60 282-1 · IEC 60 549**

Rated current	Part No.	D= Diameter inch	D= Diameter mm	Rated breaking capacity kA	Weight (kg/1)	Pack
6.3 A	30 356 21	2.5	63.5	63	1.8	1
10 A	30 356 21	2.5	63.5	63	1.8	1
16 A	30 356 21	2.5	63.5	63	1.8	1
20 A	30 356 21	2.5	63.5	63	1.8	1
25 A	30 356 21	2.5	63.5	63	1.8	1
31.5 A	30 356 21	2.5	63.5	63	1.8	1
40 A	30 356 21	2.5	63.5	63	1.8	1
50 A	30 356 21	2.5	63.5	63	1.8	1
63 A	30 356 21	2.5	63.5	63	1.8	1
80 A	30 356 21	2.5	63.5	63	1.8	1
100 A	30 356 21	2.5	63.5	63	1.8	1
125 A	30 357 21	2.99	76	63	2.5	1
160 A	30 357 21	2.99	76	63	2.5	1
200 A	30 358 21	2.99	76	63	3.6	1
250 A	30 358 21	2.99	76	63	3.6	1

30 356 21/30 357 21

E	**10.00 ”** (254 mm)
L	**10.75 ”** (273 mm)
F	**1.57 ”** (40 mm)

30 358 21

E	**14.13 ”** (359 mm)
L	**14.88 ”** (378 mm)
F	**1.57 ”** (40 mm)

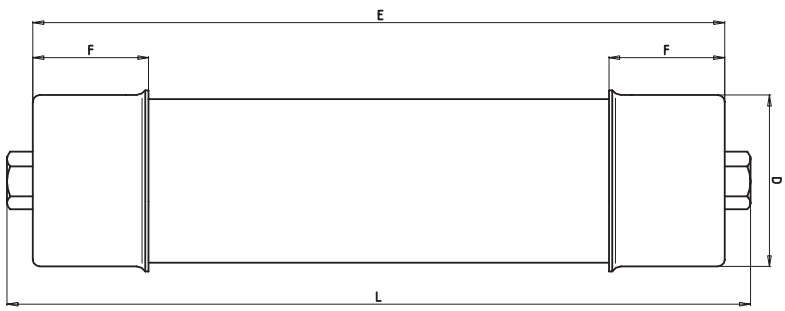

MEDIUM VOLTAGE FUSES FOR CAPACITORS

NORTH AMERICAN STYLE

Rated voltage	Class	thread	Standard
AC 7.2 kV	**Back up**	**M16**	**IEC 60 282-1 · IEC 60 549**

Rated current	Part No.	D= Diameter inch	D= Diameter mm	Rated breaking capacity kA	Weight (kg/1)	Pack
6.3 A	30 359 21	2.5	63.5	63	1.8	1
10 A	30 359 21	2.5	63.5	63	1.8	1
16 A	30 359 21	2.5	63.5	63	1.8	1
20 A	30 359 21	2.5	63.5	63	1.8	1
25 A	30 359 21	2.5	63.5	63	1.8	1
31.5 A	30 359 21	2.5	63.5	63	1.8	1
40 A	30 359 21	2.5	63.5	63	1.8	1
50 A	30 359 21	2.5	63.5	63	1.8	1
63 A	30 359 21	2.5	63.5	63	1.8	1
80 A	30 359 21	2.5	63.5	63	1.8	1
100 A	30 359 21	2.5	63.5	63	1.8	1
125 A	30 360 21	2.99	76	63	2.5	1
160 A	30 360 21	2.99	76	63	2.5	1
200 A	30 360 21	2.99	76	63	2.5	1

30 359 21

E	**10.00 ”** (254 mm)
L	**10.75 ”** (273 mm)
F	**1.57 ”** (40 mm)

30 360 21

L1	**14.13 ”** (359 mm)
L2	**14.88 ”** (378 mm)
F	**1.57 ”** (40 mm)

SIBA FUSES

MEDIUM VOLTAGE FUSES FOR CAPACITORS

NORTH AMERICAN STYLE

Rated voltage	Class	thread	Standard
AC 15.5 kV	**Back up**	**M16**	**IEC 60 282-1 · IEC 60 549**

Rated current	Part No.	D= Diameter inch	D= Diameter mm	Rated breaking capacity kA	Weight (kg/1)	Pack
6.3 A	30 361 21	2.5	63.5	63	2.5	1
10 A	30 361 21	2.5	63.5	63	2.5	1
16 A	30 361 21	2.5	63.5	63	2.5	1
20 A	30 361 21	2.5	63.5	63	2.5	1
25 A	30 361 21	2.5	63.5	63	2.5	1
31.5 A	30 361 21	2.5	63.5	63	2.5	1
40 A	30 361 21	2.5	63.5	63	2.5	1
50 A	30 361 21	2.5	63.5	63	2.5	1
63 A	30 361 21	2.5	63.5	63	2.5	1
80 A	30 361 21	2.5	63.5	63	2.5	1
100 A	30 361 21	2.5	63.5	63	2.5	1

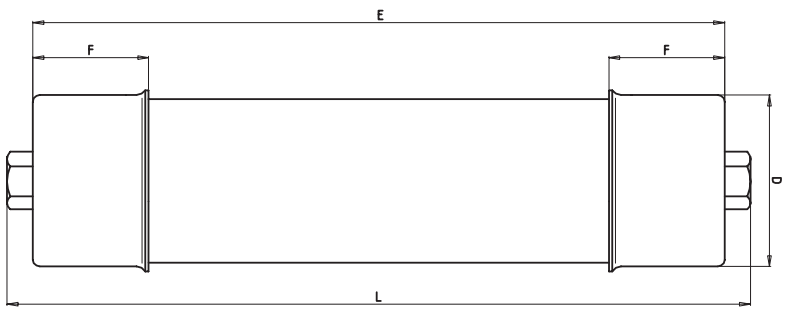

E	**14.13 ”** (359 mm)
L	**14.88 ”** (378 mm)
F	**1.57 ”** (40 mm)

Rated voltage	Class	thread
AC 4.8 kV	**Back up**	**1/2” UNC**

Rated current	Part No.	Breaking current kA	Pre-arcing I^2t-value A^2s	Total I^2t-value A^2s	Power loss W
6.3 A	30 349 21	63	45	330	11
10 A	30 349 21	63	75	500	19
16 A	30 349 21	63	250	1,800	13
20 A	30 349 21	63	640	4,300	14
25 A	30 349 21	63	1050	6,700	16
31.5 A	30 349 21	63	1700	10,800	20
40 A	30 349 21	63	2900	17,100	26
50 A	30 349 21	63	5700	29,700	30
63 A	30 349 21	63	10,700	59,400	37
80 A	30 349 21	63	21,000	126,000	42
100 A	30 349 21	63	33,000	189,000	55
125 A	30 350 21	63	47,000	351,000	78
160 A	30 350 21	63	90,000	513,000	93
200 A	30 351 21	63	230,000	571,000	123
250 A	30 351 21	63	371,000	892,000	161

Rated voltage	Class	thread
AC 7.2 kV	**Back up**	**1/2” UNC**

Rated current	Part No.	Breaking current kA	Pre-arcing I^2t-value A^2s	Total I^2t-value A^2s	Power loss W
6.3 A	30 352 21	63	45	330	16
10 A	30 352 21	63	75	500	22
16 A	30 352 21	63	250	1,800	19
20 A	30 352 21	63	640	4,300	21
25 A	30 352 21	63	1050	6,700	24
31.5 A	30 352 21	63	1700	10,800	30
40 A	30 352 21	63	2900	17,100	39
50 A	30 352 21	63	5700	29,700	45
63 A	30 352 21	63	10,700	59,400	55
80 A	30 352 21	63	21,000	126,000	63
100 A	30 352 21	63	33,000	189,000	82
125 A	30 353 21	63	47,000	351,000	117
160 A	30 353 21	63	90,000	513,000	139
200 A	30 353 21	63	230,000	571,000	154

TIME CURRENT CHARACTERISTICS AND CUT OFF CURRENT DIAGRAM
PLEASE REFER TO PAGE HHC 12

Rated voltage	Class	thread
AC 15.5 kV	**Back up**	**1/2” UNC**

Rated current	Part No.	Breaking current kA	Pre-arcing I^2t-value A^2s	Total I^2t-value A^2s	Power loss W
6.3 A	30 354 21	63	45	330	21
10 A	30 354 21	63	75	500	38
16 A	30 354 21	63	250	1,800	37
20 A	30 354 21	63	640	4,300	40
25 A	30 354 21	63	1050	6,700	56
31.5 A	30 354 21	63	1700	10,800	65
40 A	30 354 21	63	2900	17,100	84
50 A	30 354 21	63	5700	29,700	101
63 A	30 354 21	63	10,700	59,400	106
80 A	30 354 21	63	21,000	126,000	137
100 A	30 354 21	63	33,000	189,000	182

Rated voltage	Class	thread
AC 4.8 kV	**Back up**	**M16**

Rated current	Part No.	Breaking current kA	Pre-arcing I^2t-value A^2s	Total I^2t-value A^2s	Power loss W
6.3 A	30 349 21	63	45	330	11
10 A	30 349 21	63	75	500	19
16 A	30 349 21	63	250	1,800	13
20 A	30 349 21	63	640	4,300	14
25 A	30 349 21	63	1050	6,700	16
31.5 A	30 349 21	63	1700	10,800	20
40 A	30 349 21	63	2900	17,100	26
50 A	30 349 21	63	5700	29,700	30
63 A	30 349 21	63	10,700	59,400	37
80 A	30 349 21	63	21,000	126,000	42
100 A	30 349 21	63	33,000	189,000	55
125 A	30 350 21	63	47,000	351,000	78
160 A	30 350 21	63	90,000	513,000	93
200 A	30 351 21	63	230,000	571,000	123
250 A	30 351 21	63	371,000	892,000	161

TIME CURRENT CHARACTERISTICS AND CUT OFF CURRENT DIAGRAM
PLEASE REFER TO PAGE HHC 12

Rated voltage	Class	thread
AC 7.2 kV	**Back up**	**M16**

Rated current	Part No.	Breaking current kA	Pre-arcing I^2t-value A^2s	Total I^2t-value A^2s	Power loss W
6.3 A	30 352 21	63	45	330	16
10 A	30 352 21	63	75	500	22
16 A	30 352 21	63	250	1,800	19
20 A	30 352 21	63	640	4,300	21
25 A	30 352 21	63	1050	6,700	24
31.5 A	30 352 21	63	1700	10,800	30
40 A	30 352 21	63	2900	17,100	39
50 A	30 352 21	63	5700	29,700	45
63 A	30 352 21	63	10,700	59,400	55
80 A	30 352 21	63	21,000	126,000	63
100 A	30 352 21	63	33,000	189,000	82
125 A	30 353 21	63	47,000	351,000	117
160 A	30 353 21	63	90,000	513,000	139
200 A	30 353 21	63	230,000	571,000	154

Rated voltage	Class	thread
AC 15.5 kV	**Back up**	**M16**

Rated current	Part No.	Breaking current kA	Pre-arcing I^2t-value A^2s	Total I^2t-value A^2s	Power loss W
6.3 A	30 354 21	63	45	330	21
10 A	30 354 21	63	75	500	38
16 A	30 354 21	63	250	1,800	37
20 A	30 354 21	63	640	4,300	40
25 A	30 354 21	63	1050	6,700	56
31.5 A	30 354 21	63	1700	10,800	65
40 A	30 354 21	63	2900	17,100	84
50 A	30 354 21	63	5700	29,700	101
63 A	30 354 21	63	10,700	59,400	106
80 A	30 354 21	63	21,000	126,000	137
100 A	30 354 21	63	33,000	189,000	182

TIME CURRENT CHARACTERISTICS AND CUT OFF CURRENT DIAGRAM
PLEASE REFER TO PAGE HHC 12

Time Current Characteristics — Back up

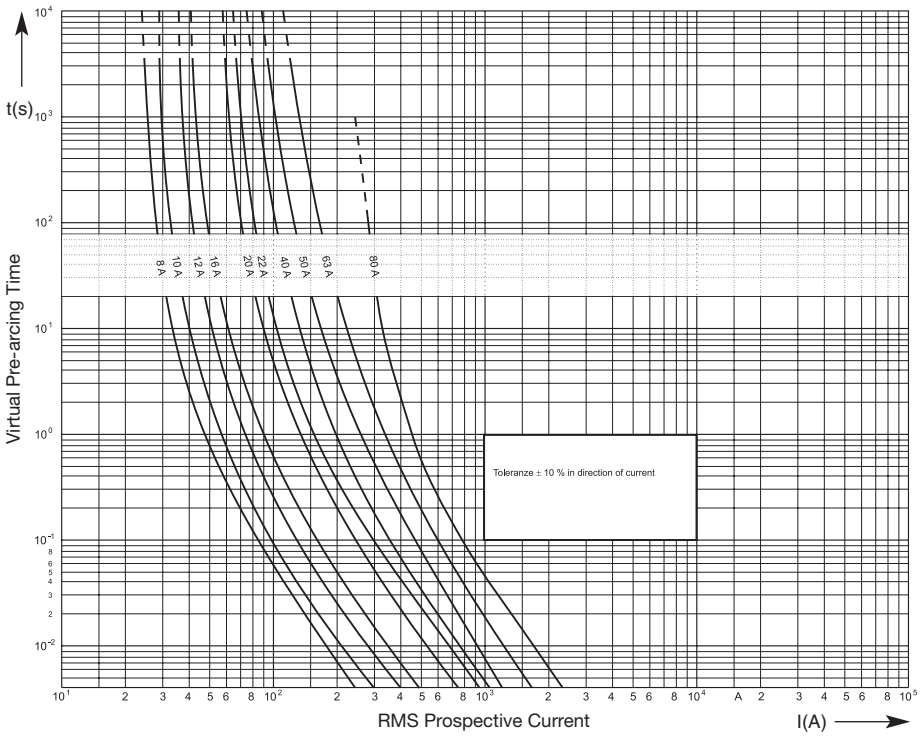

Cut Off Current Diagram — Back up

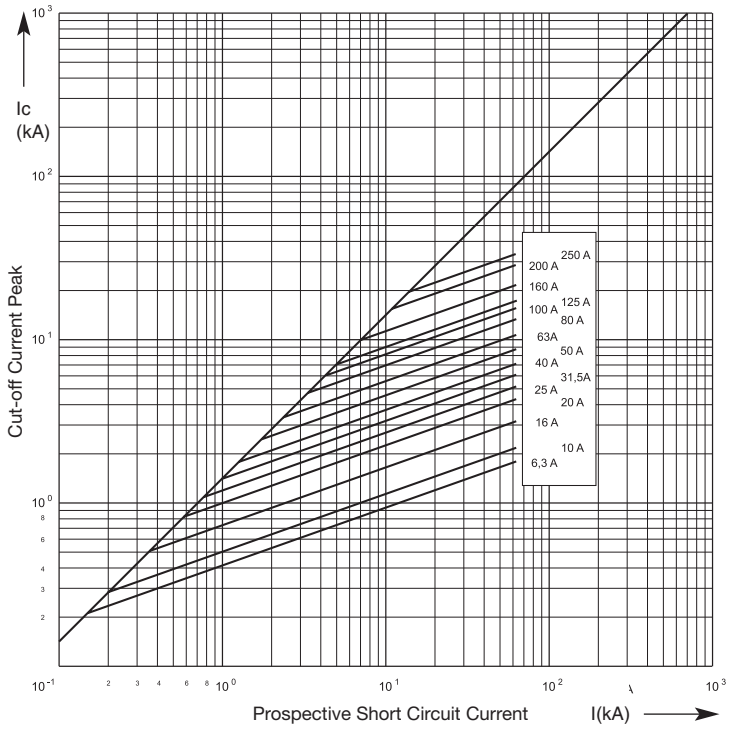

MEDIUM VOLTAGE FUSES

EUROPEAN STANDARD

FOR INSTALLATION INSIDE TRANSFORMERS UNDER OIL

General purpose fuses installed in transformers

The installation of high-voltage fuse-links inside oil filled transformers provides space and cost savings for the total concept of distribution transformer substations. They furthermore provide superior protection inside the concept of so called "Intrinsically Safe Transformers".

For this purpose, the high voltage fuses are designed as general purpose fuse links. The fuse links will provide detection and cut-off of a widest possible range of all fault currents.

Above the desired bursting protection of transformer tanks, they also interrupt.

The fuse-links fulfill all requirements regarding oil-tightness during the manufacturing phase of the transformer itself and also during service operation. The fuse-links are safe against continuous temperatures of 105°C and they can also withstand very high temperatures arising during vacuum impregnation of transformers.

The fuse-links are provided with threaded holes size M10 at their contact caps for easy installation inside the transformer.

Because of the specific design of the ageing resistant fuse element system, by the use of high grade ceramic as well as appropriate sealing methods, these fuse links can be used inside oil filled transformers free of any ageing for many decades.

Because these fuses are fitted inside transformers under oil, they are subjected to severe stresses like partial discharges, high temperatures and vacuum during filling and drying process of transformer manufacture. Superior design and construction of our fuses and long positive field experience eliminate problems which may be caused due to such stresses.

Summary of advantages

- Space and cost saving in distribution transformer substation design
- Protection against short-circuit and internal transformer faults
- Bursting protection of the transformer through specific characteristic of the fuse-link
- Resistance against ageing

SIBA FUSES

MEDIUM VOLTAGE FUSES

EUROPEAN STANDARD

FOR INSTALLATION INSIDE TRANSFORMERS UNDER OIL

Selection Guide

Rated Voltage AC kV	Class	Part No.	Selector Guide Page	Techn. Data Page
12	General purpose	30 310 91	HHO 3	HHO 5
12	Back up	30 310 11	HHO 3	HHO 5
17.5	General purpose	30 311 91	HHO 3	HHO 5
24	General purpose	30 312 91	HHO 4	HHO 6
24	Back up	30 312 11	HHO 4	HHO 6
36	Back up	30 323 11	HHO 4	HHO 6

MEDIUM VOLTAGE FUSES

EUROPEAN STANDARD

FOR INSTALLATION INSIDE TRANSFORMERS UNDER OIL

Rated voltage AC 12 kV — Oiltight

Rated current	Part No.	Breaking current kA	Class	Weight (kg/1)	Pack
8 A	30 310 91	63	General purpose	2.4	1
12 A	30 310 91	63	General purpose	2.4	1
16 A	30 310 91	63	General purpose	2.4	1
20 A	30 310 91	63	General purpose	2.4	1
22 A	30 310 91	63	General purpose	2.4	1
40 A	30 310 91	63	General purpose	2.4	1
50 A	30 310 91	63	General purpose	2.4	1
63 A	30 310 91	63	General purpose	2.4	1
80 A	30 310 11	63	Back up	2.4	1
100 A	30 310 11	63	Back up	2.4	1
125 A	30 310 11	63	Back up	2.4	1

Rated voltage AC 17.5 kV — Oiltight

Rated current	Part No.	Breaking current kA	Class	Weight (kg/1)	Pack
8 A	30 311 91	63	General purpose	2.4	1
10 A	30 311 91	63	General purpose	2.4	1
12 A	30 311 91	63	General purpose	2.4	1
16 A	30 311 91	63	General purpose	2.4	1
20 A	30 311 91	63	General purpose	2.4	1

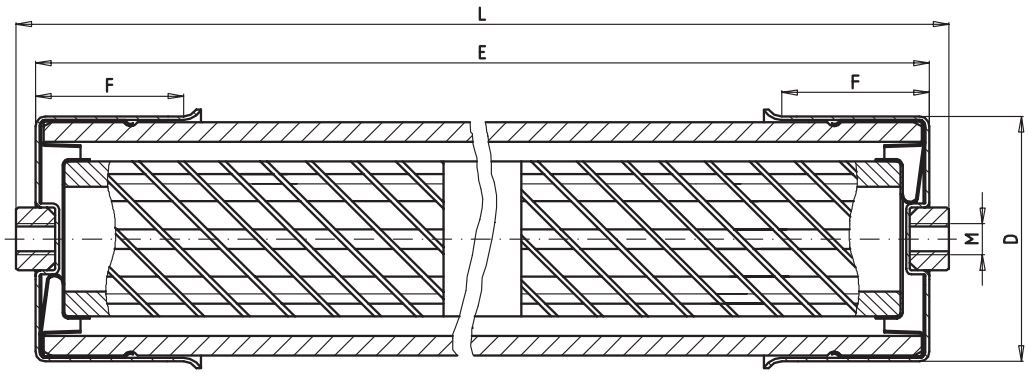

D	2.48 ”	(63 mm)
E	14.17 ”	(360 mm)
F	1.57 ”	(40 mm)
L	14.60 ”	(371 mm)
M	M10	

SIBA FUSES

MEDIUM VOLTAGE FUSES

EUROPEAN STANDARD

FOR INSTALLATION INSIDE TRANSFORMERS UNDER OIL

Rated voltage **AC 24 kV** — Oiltight

Rated current A	Part No.	Breaking current kA	Class	Weight (kg/1)	Pack
8 A	30 312 91	63	General purpose	2.4	1
12 A	30 312 91	63	General purpose	2.4	1
16 A	30 312 91	63	General purpose	2.4	1
20 A	30 312 91	63	General purpose	2.4	1
31.5 A	30 312 11	63	Back up	2.4	1
40 A	30 312 11	63	Back up	2.4	1
50 A	30 312 11	63	Back up	2.4	1
63 A	30 312 11	63	Back up	2.4	1
80 A	30 312 11	63	Back up	2.4	1

Rated voltage **AC 36 kV** — Oiltight

Rated current	Part No.	Breaking current kA	Class	Weight (kg/1)	Pack
10 A	30 323 11	40	Back up	2.4	1
16 A	30 223 11	40	Back up	2.4	1
20 A	30 323 11	40	Back up	2.4	1
25 A	30 323 11	40	Back up	2.4	1
31,5 A *	30 323 11	40	Back up	2.4	1
40 A *	30 323 11	40	Back up	2.4	1

*** E= 17.32 ” (440 mm)**

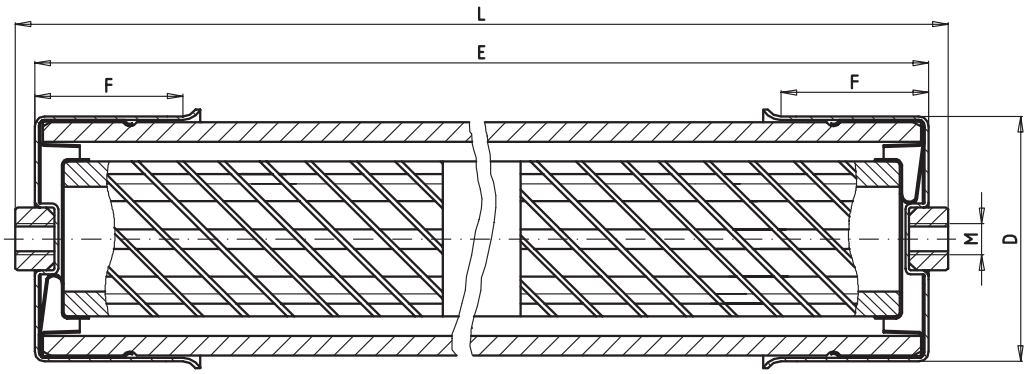

D	**2.48 ”**	(63 mm)
E	**14.17 ”**	(360 mm)
F	**1.57 ”**	(40 mm)
L	**14.60 ”**	(371 mm)
M	**M10**	

Length	Rated voltage	Class
360 mm	**AC 12 kV**	**General purpose / Back up**

Rated current	Part No.	Breaking current kA	Power loss W	Class	Pre-arcing integral I^2t / A^2s	Total I^2t Value A^2s
8 A	30 310 91	63	8	General purpose	172	1,800
12 A	30 310 91	63	13	General purpose	340	3,800
16 A	30 310 91	63	16.5	General purpose	830	9,200
20 A	30 310 91	63	20	General purpose	1,730	17,300
22 A	30 310 91	63	12	General purpose	2,260	22,600
40 A	30 310 91	63	35	General purpose	3,530	35,500
50 A	30 310 91	63	46	General purpose	5,490	55,000
63 A	30 310 91	63	62	General purpose	9,030	90,000
80 A	30 310 11	63	91	Back up	17,500	175,000
100 A	30 310 11	63	115	Back up	41,500	415,000
125 A	30 310 11	63	176	Back up	56,500	565,000

Length	Rated voltage	Class
360 mm	**AC 17.5 kV**	**General purpose**

Rated current	Part No.	Breaking current kA	Power loss W	Class	Pre-arcing integral I^2t / A^2s	Total I^2t Value A^2s
8 A	30 311 91	63	10	General purpose	172	1,800
10 A	30 311 91	63	15	General purpose	250	2,800
12 A	30 311 91	63	17	General purpose	460	5,100
16 A	30 311 91	63	22	General purpose	1,100	12,000
20 A	30 311 91	63	27	General purpose	1,700	18,500

TIME CURRENT CHARACTERISTICS AND CUT OFF CURRENT DIAGRAM
PLEASE REFER TO PAGES HHO 7 AND HHO 8

Length	Rated voltage	Class
360 mm	**AC 24 kV**	**General purpose / Back up**

Rated current	Part No.	Breaking current kA	Power loss W	Class	Pre-arcing integral I^2t / A^2s	Total I^2t Value A^2s
8 A	30 312 91	63	17	General purpose	172	1,900
10 A	30 312 91	63	21	General purpose	250	2,800
12 A	30 312 91	63	24	General purpose	460	5,100
16 A	30 312 91	63	31	General purpose	830	8,300
20 A	30 312 91	63	21	General purpose	1,730	17,300
31.5 A	30 312 11	63	76	Back up	1,400	14,000
40 A	30 312 11	63	94	Back up	2,200	22,000
50 A	30 312 11	63	108	Back up	4,700	47,000
63 A	30 312 11	63	114	Back up	8,700	87,000
80 A	30 312 11	63	176	Back up	13,500	135,000

Length	Rated voltage	Class
360 mm	**AC 36 kV**	**Back up**

Rated current	Part No.	Breaking current kA	Power loss W	Class	Pre-arcing integral I^2t / A^2s	Total I^2t Value A^2s
10 A	30 323 11	40	85	Back up	70	1,100
16 A	30 323 11	40	50	Back up	160	1,900
20 A	30 323 11	40	73	Back up	550	6,600
25 A	30 323 11	40	88	Back up	920	11,000
31,5 A	30 323 11	40	132	Back up	1400	16,800
40 A	30 323 11	40	152	Back up	2640	31,700

TIME CURRENT CHARACTERISTICS AND CUT OFF CURRENT DIAGRAM
PLEASE REFER TO PAGES HHO 7 AND HHO 8

Time Current Characteristics

Back up

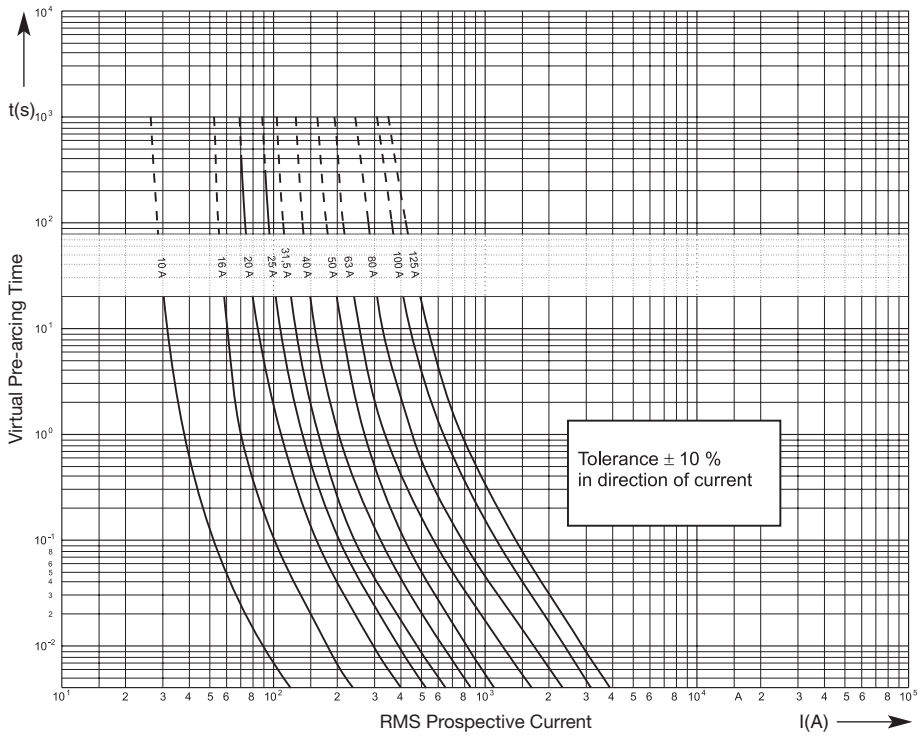

Cut Off Current Diagram

Back up

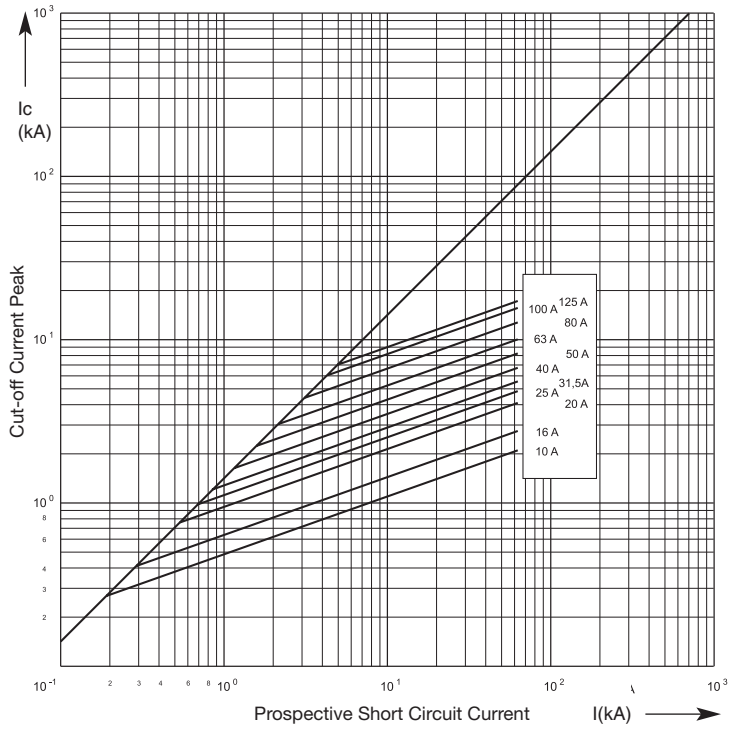

Time Current Characteristics — General purpose

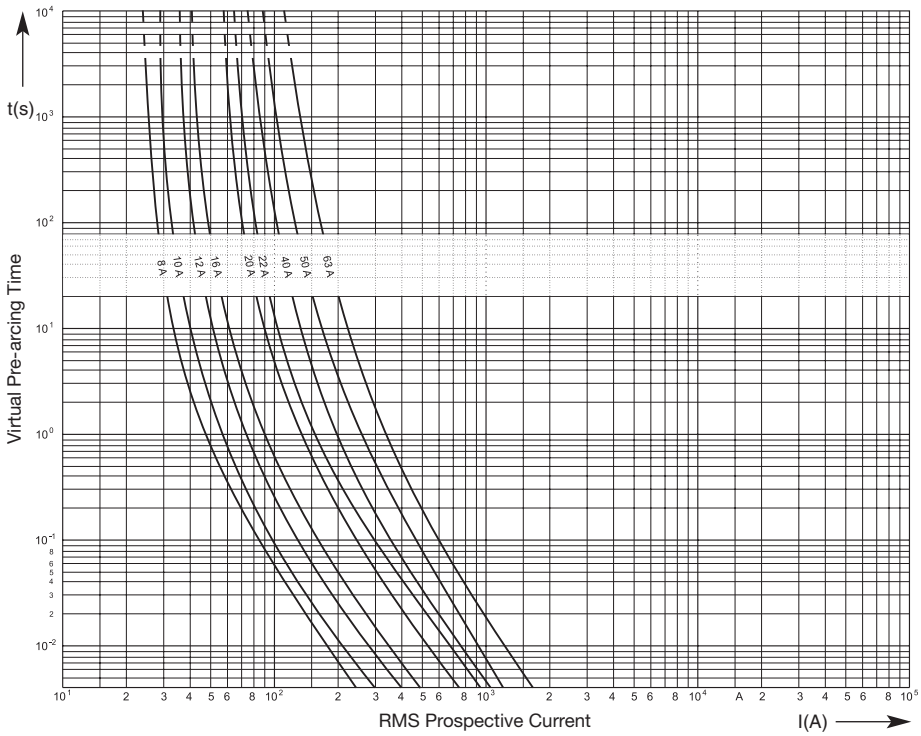

Cut Off Current Diagram — General purpose

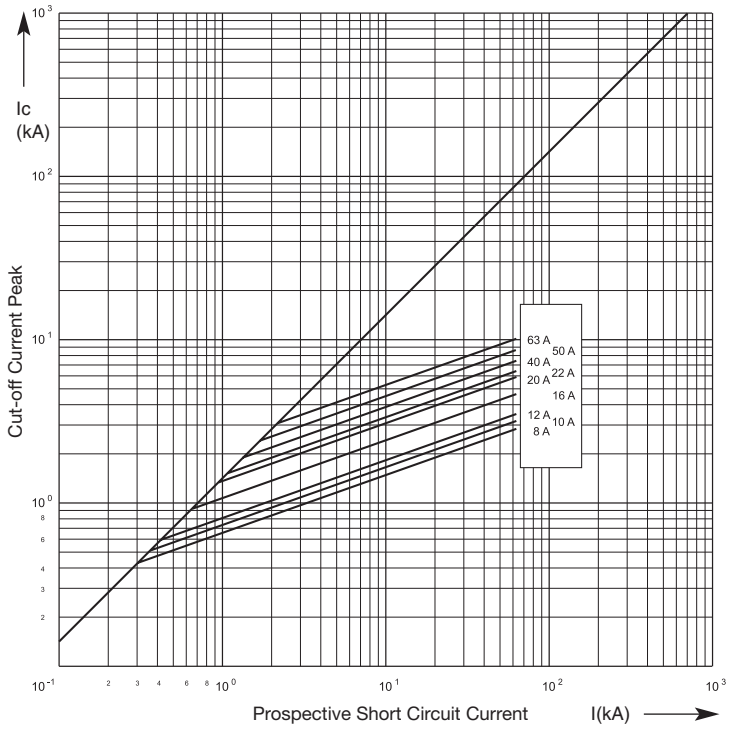

Recommendation for protection of main transformer

Rated Voltage kV	Transformer rated capacitiy kVA										
	50	100	160	200	250	315	400	500	630	800	1000
12	8	12	16	20	22	40	50	63	80	100	-
24	8	8	10	12	16	20	20	31,5	40	63	80
36	-	-	10	16	16	20	20	-	-	-	-

MEDIUM VOLTAGE FUSES

EUROPEAN STANDARD

FOR OVERHEAD LINES

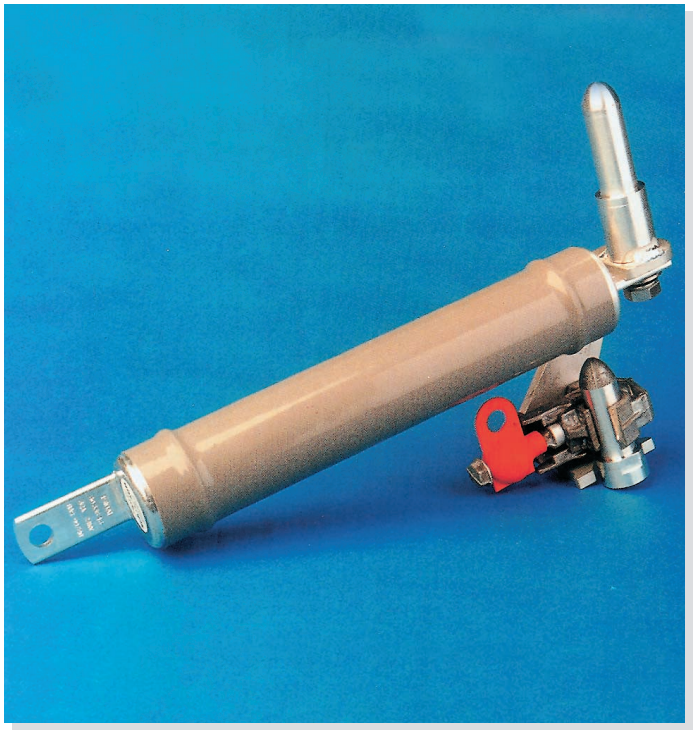

Medium voltage fuses
Plug-in fuses for overhead lines

Medium voltage fuse links including overhead line connectors are provided as a set. They allow in overhead lines to provide fuse protection on pole mounted distribution transformers.

The set consists of a high voltage fuse link including a set of contacting armatures.

- A tee-off connection based on the installation of such a set also provides the possibility to isolate the transformer from the service line.
  As isolation can be achieved with the overhead line alive, service or modification work on the transformer circuit will not cause interruption supply of that overhead line. The transformer will only be disconnected on the low voltage side.
- The high voltage fuse links are designed to provide bursting protection of the transformer. The time-current characteristic of the fuse links matches with the maximum withstand capability of standard pole mounted transformer under fault conditions. Through appropriate design of the fuse link melting elements they are specially suitable for overhead lines which are subjected to lighting strikes because the short current peaks of such strikes will not cause opening of the fuse link.

  The fuse links with rated voltage 24 kV are suitable for networks with service voltages 10 up to 20 kV.
- Outstanding advantage for installation work on overhead lines is the low weight of the fuse link and connectors by using aluminium for the contact armatures and furthermore polyester for the housing of the fuse link. For protection against ultra-violett radiation the polyester housing is covered with a protection sleeve.

Further technical data are available on request.

HHP

SIBA FUSES

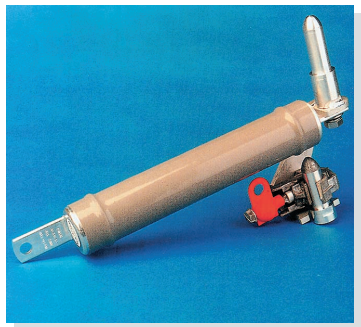

MEDIUM VOLTAGE FUSES

FRENCH STANDARD

FOR OVERHEAD LINES

Rated voltage	Class
AC 24 kV	**Back up**

Rated current A	Part No.	Breaking current kA	Weight (kg/1)	Pack
32	30 335 13	12	2.2	1

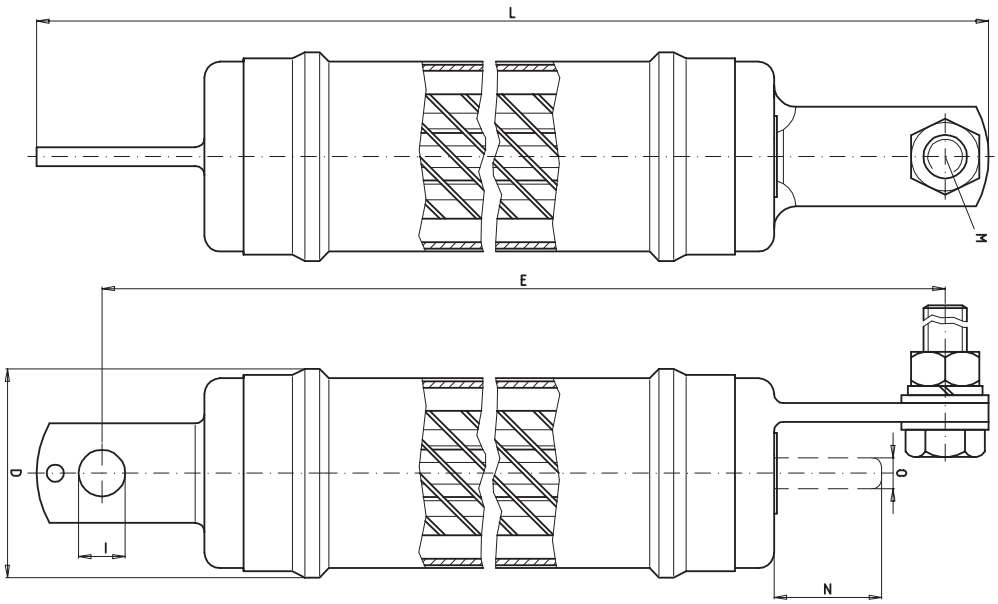

D	**2.64 ”**	(67 mm)
E	**16.77 ”**	(426 mm)
I	**0.60 ”**	(15 mm)
L	**18.15 ”**	(461 mm)
M	**M14**	
N	**1.38 ”**	(35 mm)
O	**0.40 ”**	(10 mm)

Time Current Characteristics

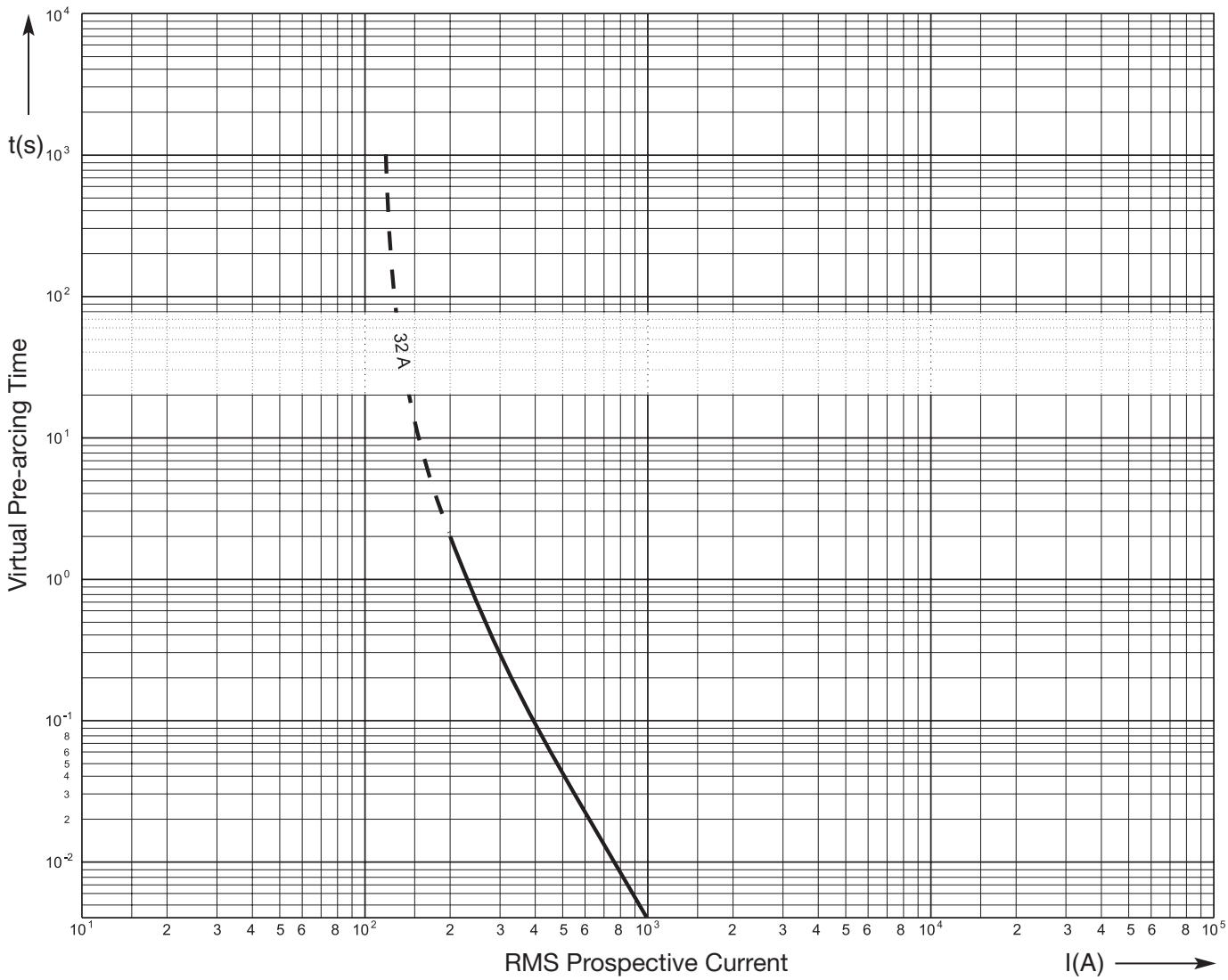

Cut Off Current Diagram

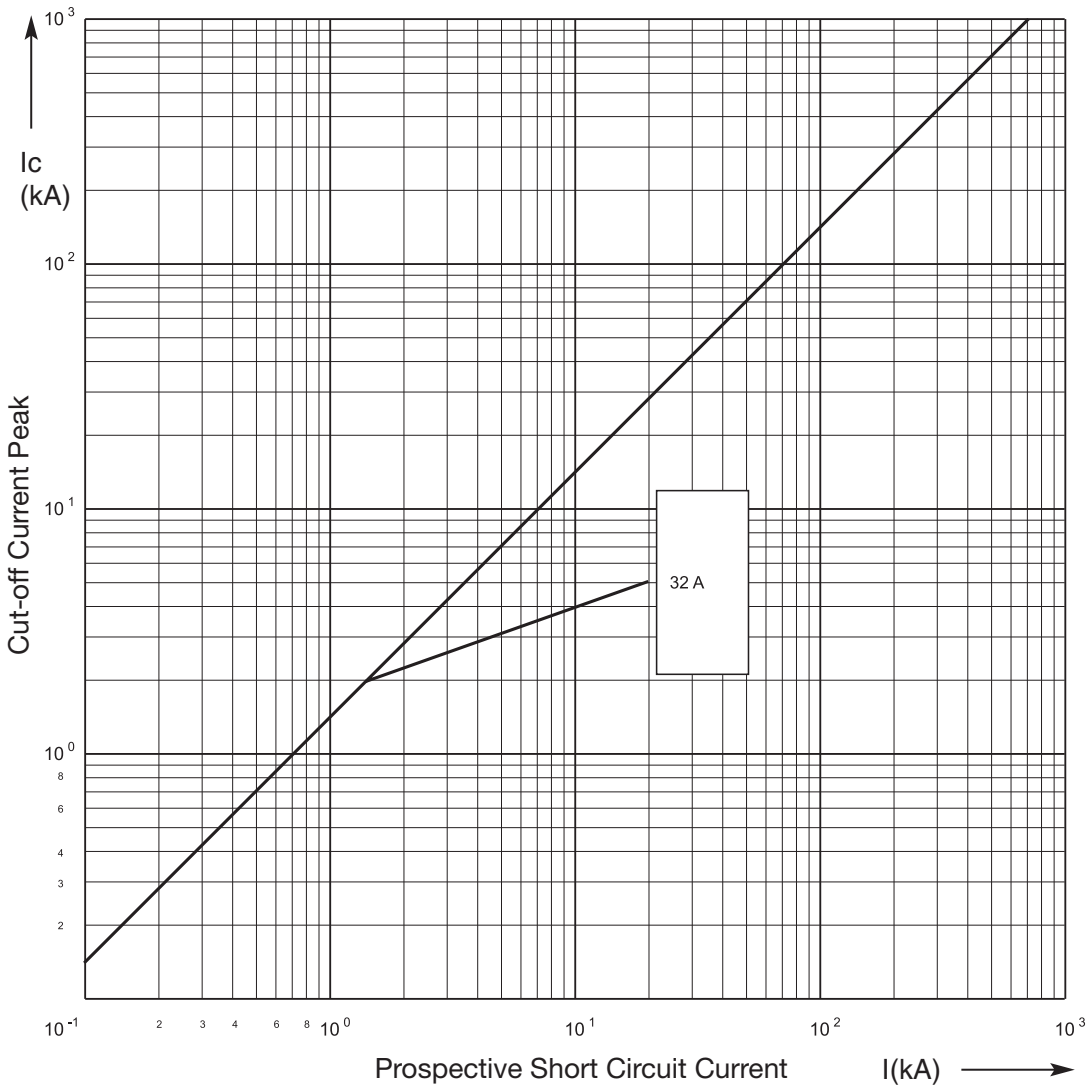

HIGH VOLTAGE FUSES

MOTOR CIRCUIT PROTECTION – DIN AND BRITISH STANDARD

SIBA Motor Rated Fuses are available in
- German DIN Standard and
- British Standard Design

The large variety in body sizes / mounting style / Voltage and Amp rating allow great flexibility for the designer of switchboard panels.

Standards:

- Dimensions:	DIN 43625 and BS 2692
- Electrical:	IEC 60644 IEC 60470 IEC 60282-1
Class:	Back up
Voltage Ratings:	AC 3.6 - 7.2 kV
Current Ratings:	50 - 315 A

Features / Benefits

- Protection of Motor circuits according IEC 60644
- High resistance against cyclic and peak current loads / avoiding ageing because of high motor start up currents
- Low power losses / minimising temperature increase in narrow contactor enclosures
- Low minimum interrupting currents for operation of overcurrents in the range 3 - 3.5 x rated current
- Availability of SIBA-Temperature limiters for switchgear protection against excessive temperature rise
- Type tested according IEC 60470 in cooperation with the major European Panel builders
- Available in DIN 43625 and BS 2692 dimensions

SIBA FUSES

HIGH VOLTAGE FUSES

MOTOR CIRCUIT PROTECTION – DIN AND BS STANDARD

Selection Guide

Size	Rated Voltage AC kV	Class	Part No.	Selector Guide Page	Techn. Data Page
TA2	3.6	Back up	30 269 56	HHM 3	HHM 6
TA4	7.2	Back up	30 271 56	HHM 4	HHM 6
E= 292 mm	3.6	Back up	30 201 53	HHM 5	HHM 7
E= 292 mm	3.6	Back up	30 202 53	HHM 5	HHM 7
E= 292 mm	3.6	Back up	30 200 54	HHM 5	HHM 7
E= 442 mm	7.2	Back up	30 108 53	HHM 5	HHM 7
E= 442 mm	7.2	Back up	30 109 53	HHM 5	HHM 7
E= 442 mm	7.2	Back up	30 110 54	HHM 5	HHM 7

HIGH VOLTAGE FUSES

MOTOR CIRCUIT PROTECTION – BRITISH STANDARD

Size	Rated voltage	Standard
TA 2	**AC 3.6 kV**	**BS 2692-1 · IEC 60282-1 · IEC 60644**

Rated current A	Part No.	Breaking current kA	Weight (kg/1)	Pack
50	30 269 56	50	3.9	1
63	30 269 56	50	3.9	1
80	30 269 56	50	3.9	1
100	30 269 56	50	3.9	1
125	30 269 56	50	3.9	1
160	30 269 56	50	3.9	1
200	30 269 56	50	3.9	1
224	30 269 56	50	3.9	1
250	30 269 56	50	3.9	1
315	30 269 56	50	3.9	1

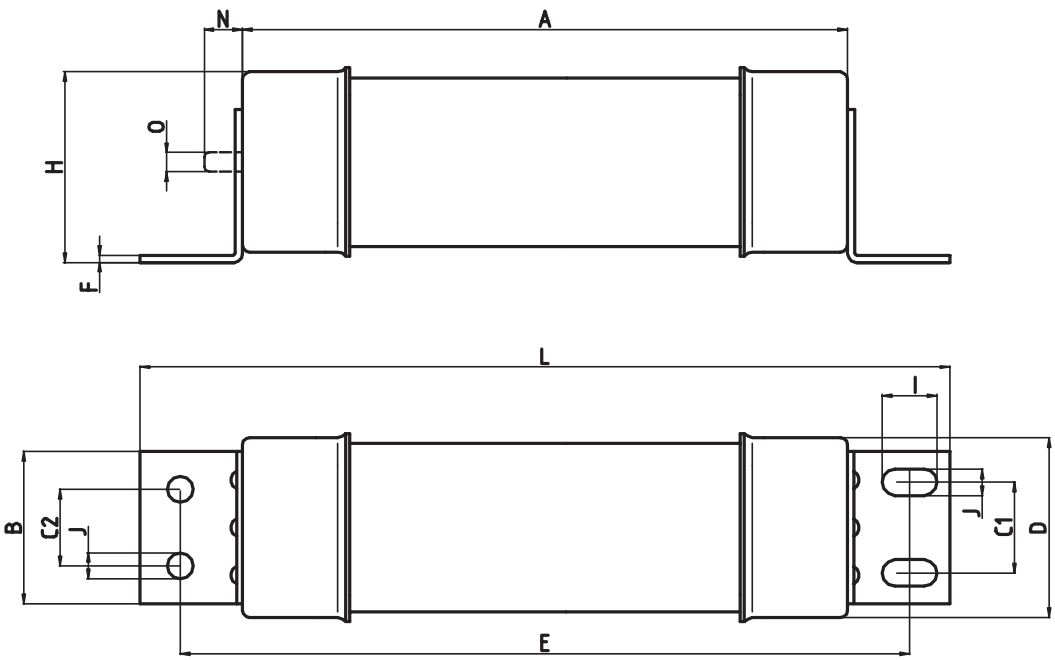

A	**10.00 ”**	(254 mm)
B	**2.56 ”**	(65 mm)
C1	**1.50 ”**	(38 mm)
C2	**1.26 ”**	(32 mm)
D	**2.99 ”**	(76 mm)
E	**12.00 ”**	(305 mm)
F	**0.12 ”**	(3 mm)
H	**3.11 ”**	(79 mm)
I	**0.91 ”**	(23 mm)
J	**0.43 ”**	(11 mm)
L	**13.39 ”**	(337 mm)
N	**0.51 ”**	(13 mm)
O	**0.31 ”**	(8 mm)

SIBA FUSES

HIGH VOLTAGE FUSES

MOTOR CIRCUIT PROTECTION – BRITISH STANDARD

Size	Rated voltage	Standard
TA 4	**AC 7.2 kV**	**BS 2692-1 · IEC 60282-1 · IEC 60644**

Rated current A	Part No.	Breaking current kA	Weight (kg/1)	Pack
50	30 271 56	50	4.2	1
63	30 271 56	50	4.2	1
80	30 271 56	50	4.2	1
100	30 271 56	50	4.2	1
125	30 271 56	50	4.2	1
160	30 271 56	50	4.2	1
200	30 271 56	50	4.2	1
224	30 271 56	50	4.2	1
250	30 271 56	50	4.2	1
315	30 271 56	50	4.2	1

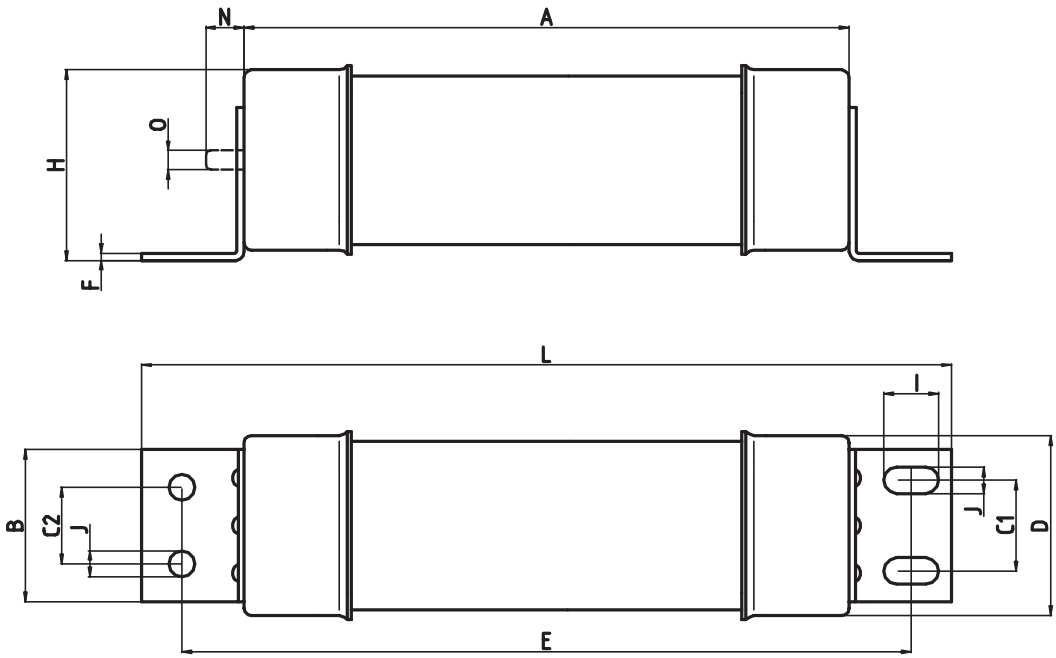

A	**15.87 ”**	(403 mm)
B	**2.56 ”**	(65 mm)
C1	**1.50 ”**	(38 mm)
C2	**1.26 ”**	(32 mm)
D	**3.00 ”**	(76 mm)
E	**17.87 ”**	(454 mm)
F	**0.12 ”**	(3 mm)
H	**3.10 ”**	(79 mm)
I	**0.90 ”**	(23 mm)
J	**0.43 ”**	(11 mm)
L	**19.13 ”**	(486 mm)
N	**0.50 ”**	(13 mm)
O	**0.31 ”**	(8 mm)

HIGH VOLTAGE FUSES

MOTOR CIRCUIT PROTECTION – DIN STANDARD

DIN Size	Rated voltage	Standard
E= 292 mm	**AC 3.6 kV**	**IEC 60282-1 · IEC 60644**

Rated current A	Part No.	D= Diameter inch	D= Diameter mm	Breaking current kA	Weight (kg/1)	Pack
50	30 201 53	2.07	53	50	1.6	1
63	30 201 53	2.07	53	50	1.6	1
80	30 201 53	2.07	53	50	1.6	1
100	30 201 53	2.07	53	50	1.6	1
125	30 202 53	2.64	67	50	2.0	1
160	30 202 53	2.64	67	50	2.0	1
200	30 200 54	3.35	85	50	3.8	1
224	30 200 54	3.35	85	50	3.8	1
250	30 200 54	3.35	85	50	3.8	1
315	30 200 54	3.35	85	50	3.8	1

DIN Size	Rated voltage	Standard
E= 442 mm	**AC 7.2 kV**	**IEC 60282-1 · IEC 60644**

Rated current A	Part No.	D= Diameter inch	D= Diameter mm	Breaking current kA	Weight (kg/1)	Pack
50	30 108 53	2.07	53	50	2.2	1
63	30 108 53	2.07	53	50	2.2	1
80	30 108 53	2.07	53	50	2.2	1
100	30 108 53	2.07	53	50	2.2	1
125	30 109 53	2.64	67	50	2.9	1
160	30 109 53	2.64	67	50	2.9	1
200	30 110 54	3.35	85	50	5.4	1
224	30 110 54	3.35	85	50	5.4	1
250	30 110 54	3.35	85	50	5.4	1
315	30 110 54	3.35	85	50	5.4	1

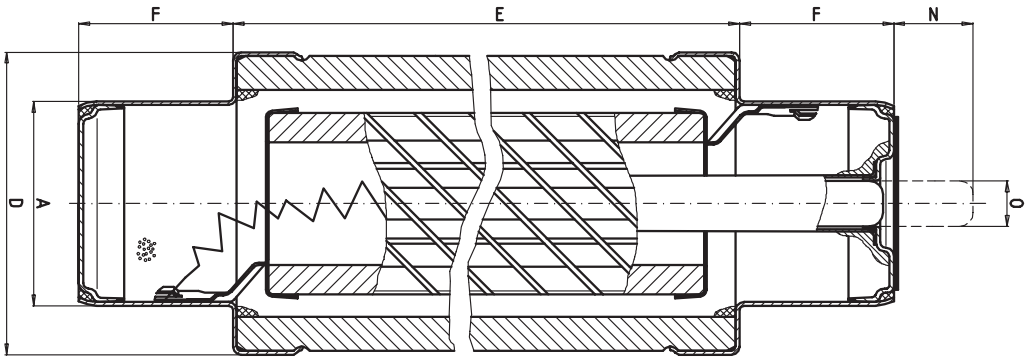

A	1.77 ”	(45 mm)
F	1.30 ”	(33 mm)
O	0.40 ”	(10 mm)
N	1.38 ”	(306 mm)

Size	Rated voltage	Class
TA 2	**AC 3.6 kV**	**Back up**

Rated current A	Part No.	Breaking current kA	Pre-arcing I^2t-value A^2s	Total I^2t-value A^2s	Power loss W
50	30 269 56	50	2,400	9,600	23
63	30 269 56	50	3,800	14,800	31
80	30 269 56	50	6,100	22,800	36
100	30 269 56	50	13,000	48,000	39
125	30 269 56	50	23,000	83,000	44
160	30 269 56	50	65,000	220,000	46
200	30 269 56	50	119,000	382,000	54
224	30 269 56	50	139,000	423,000	57
250	30 269 56	50	290,000	826,000	61
315	30 269 56	50	545,000	1,450,000	70

Size	Rated voltage	Class
TA 4	**AC 7.2 kV**	**Back up**

Rated current A	Part No.	Breaking current kA	Pre-arcing I^2t-value A^2s	Total I^2t-value A^2s	Power loss W
50	30 271 56	50	2,400	10,500	34
63	30 271 56	50	3,800	16,500	47
80	30 271 56	50	6,100	25,500	56
100	30 271 56	50	13,000	54,000	60
125	30 271 56	50	23,000	92,500	68
160	30 271 56	50	65,000	247,000	71
200	30 271 56	50	119,000	428,000	83
224	30 271 56	50	139,000	475,000	88
250	30 271 56	50	290,000	928,000	92
315	30 271 56	50	545,000	1,610,000	107

TIME CURRENT CHARACTERISTICS AND CUT OFF CURRENT DIAGRAM
PLEASE REFER TO PAGES HHM 8 AND HHM 9

DIN Size	Rated voltage	Class
E= 292 mm	**AC 3.6 kV**	**Back up**

Rated current A	Part No.	Breaking current kA	Pre-arcing I^2t-value A^2s	Total I^2t-value A^2s	Power loss W
50	30 201 53	50	2,400	9,050	27
63	30 201 53	50	3,800	14,000	38
80	30 201 53	50	6,100	21,500	44
100	30 201 53	50	13,000	46,500	47
125	30 202 53	50	23,000	79,500	51
160	30 202 53	50	65,000	215,000	53
200	30 200 54	50	119,000	370,000	58
224	30 200 54	50	139,000	415,000	61
250	30 200 54	50	290,000	810,000	64
315	30 200 54	50	545,000	1,380,000	75

DIN Size	Rated voltage	Class
E= 442 mm	**AC 7.2 kV**	**Back up**

Rated current A	Part No.	Breaking current kA	Pre-arcing I^2t-value A^2s	Total I^2t-value A^2s	Power loss W
50	30 108 53	50	2,400	10,050	39
63	30 108 53	50	3,800	15,600	55
80	30 108 53	50	6,100	24,400	66
100	30 108 53	50	13,000	52,000	71
125	30 109 53	50	23,000	89,500	73
160	30 109 53	50	65,000	239,500	76
200	30 110 54	50	119,000	419,000	88
225	30 110 54	50	139,000	465,000	94
250	30 110 54	50	290,000	909,000	98
315	30 110 54	50	545,000	1,577,000	115

TIME CURRENT CHARACTERISTICS AND CUT OFF CURRENT DIAGRAM
PLEASE REFER TO PAGES HHM 8 AND HHM 9

Time Current Characteristics

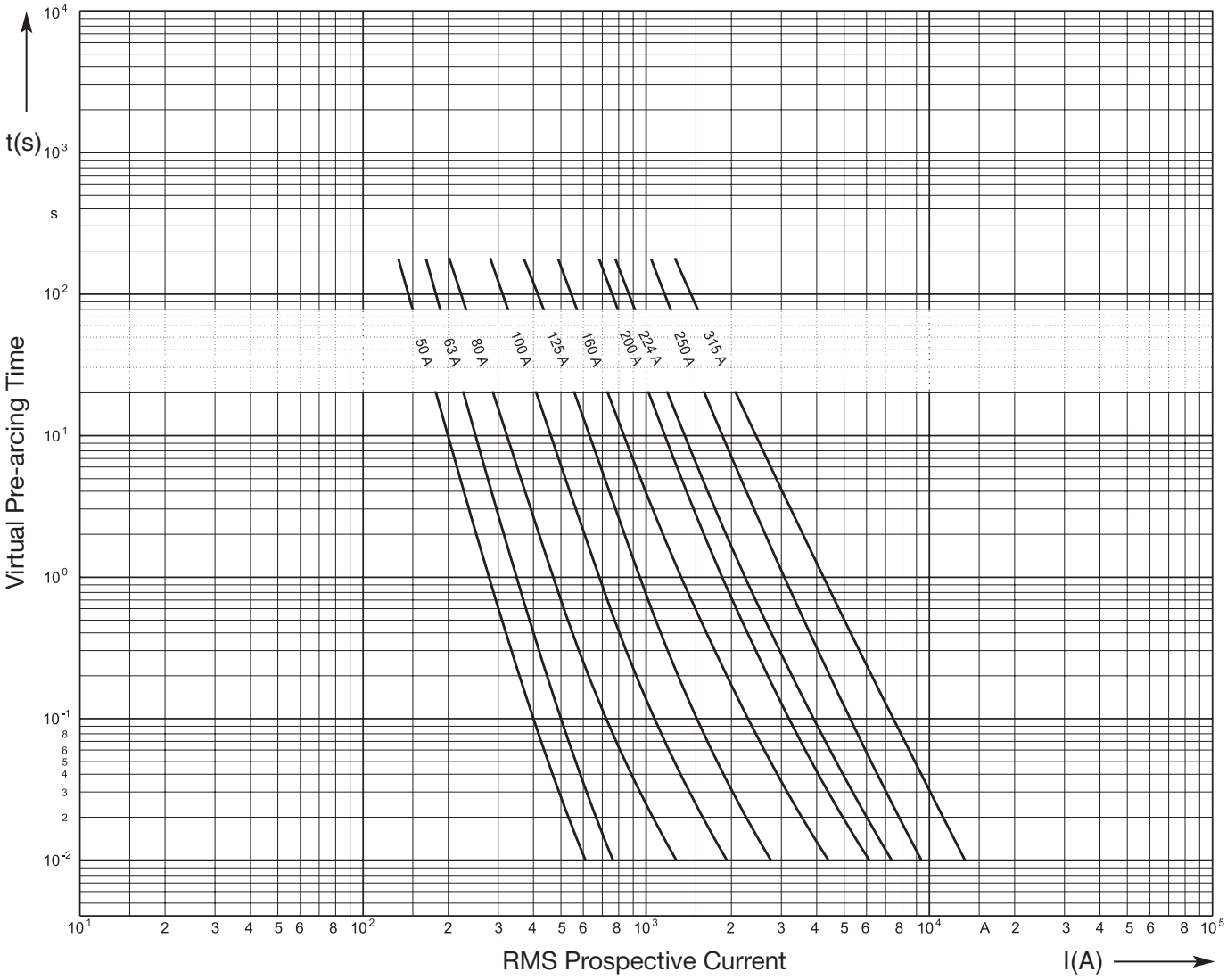

Cut Off Current Diagram

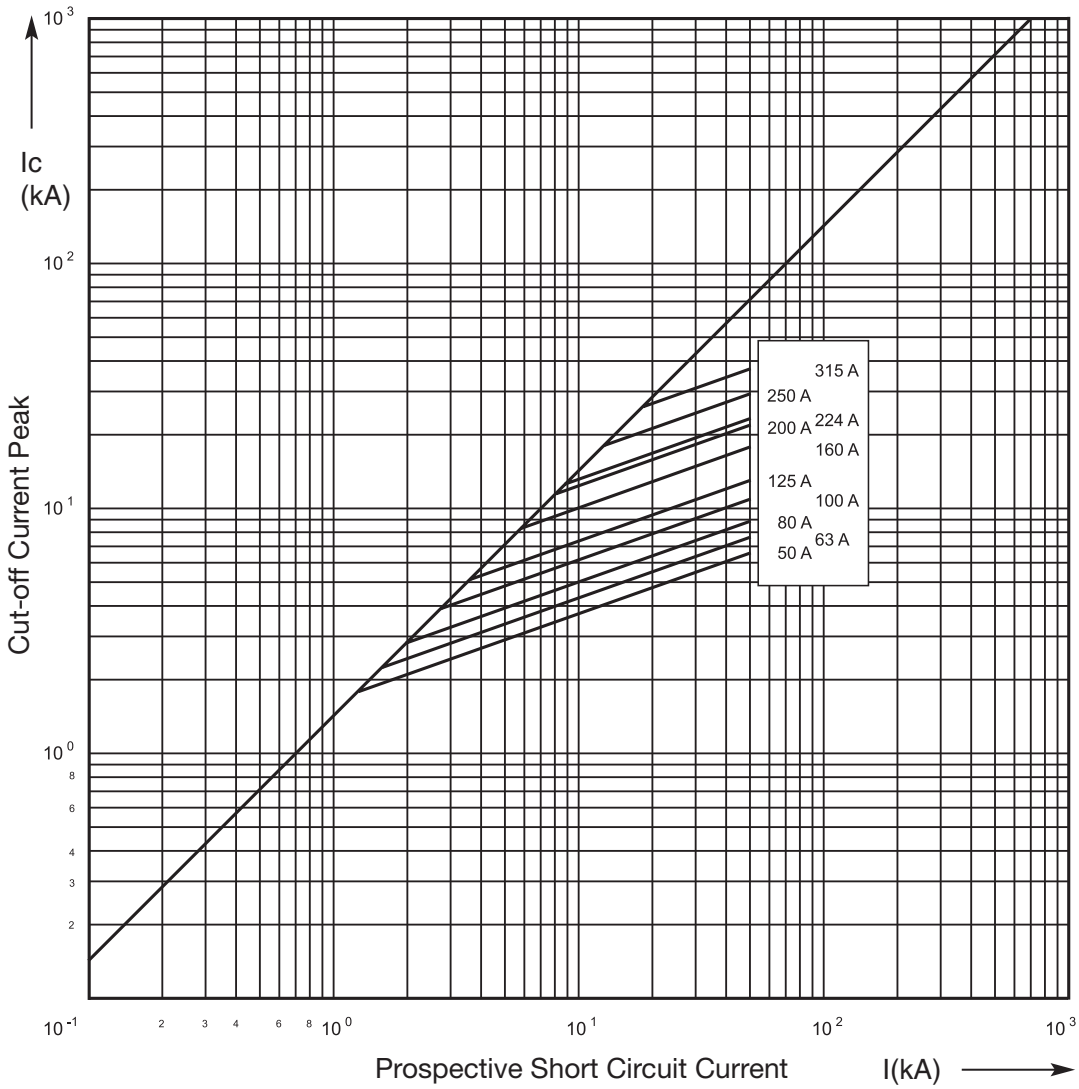

Recommendation Motor Circuit Application 6 sec

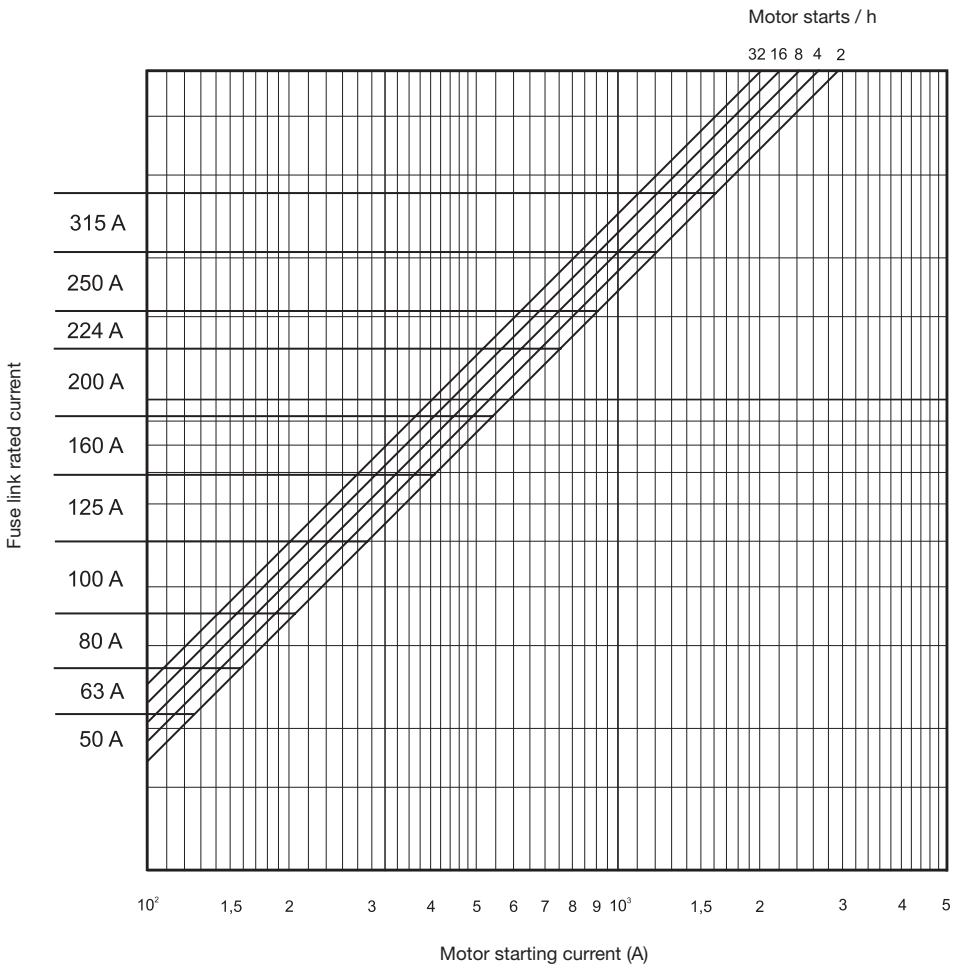

Fuse selection for motors with a run up time not exceeding **6 seconds**; e.g. Pump motors.

Two immediate successive starts are admissible.

Recommendation | Motor Circuit Application | 15 sec

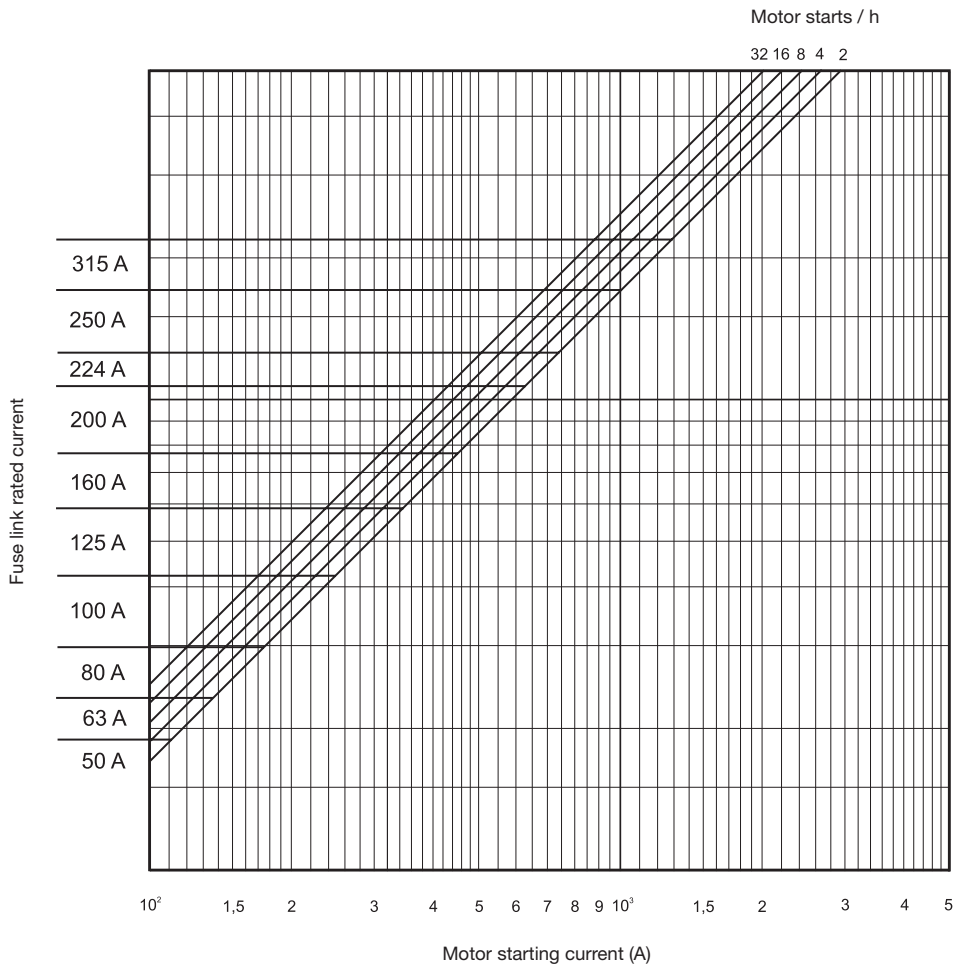

Fuse selection for motors with a run up time not exceeding **15 seconds**; e.g. Fan motors.

Two immediate successive starts are admissible.

Recommendation Motor Circuit Application 30 sec

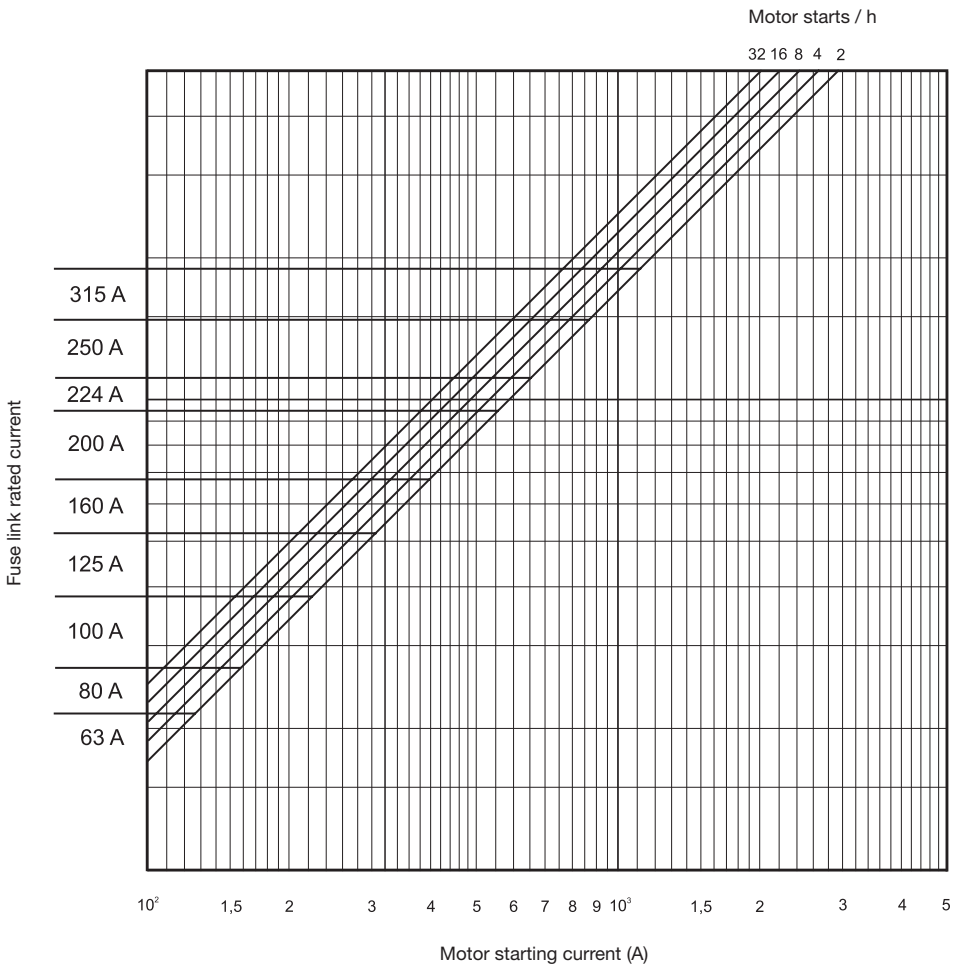

Fuse selection for motors with a run up time not exceeding **30 seconds**; e.g. Mill motors.

Two immediate successive starts are admissible.